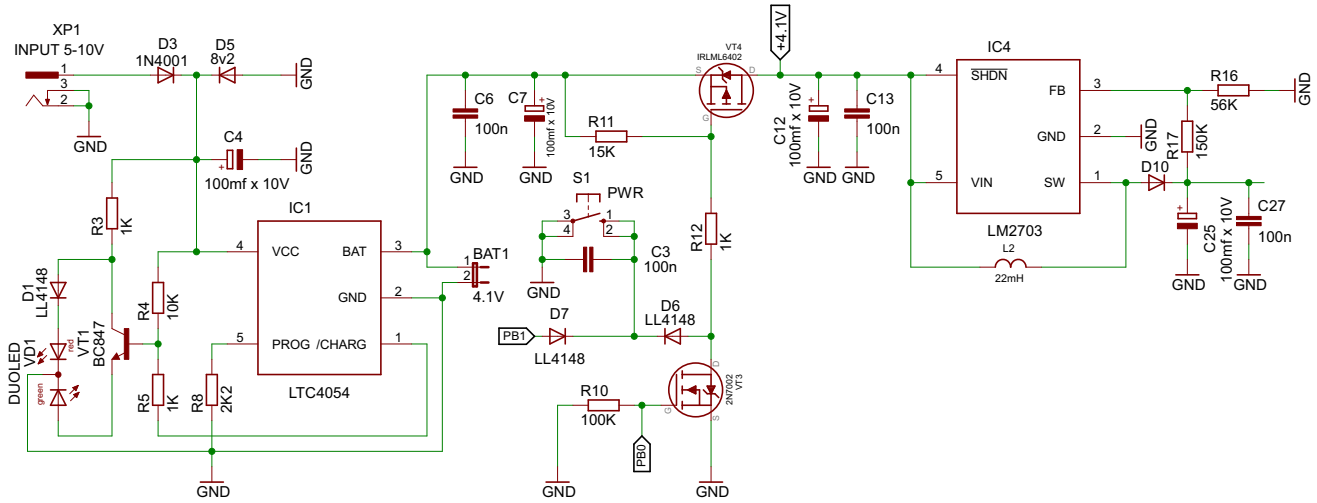
XP1
INPUT 5-10V
D3
1N4001
D5
8v2
GND
C4
100mf x 10V
R3
1K
D1
LL4148
DUOLED
VD1
VT1
BC847
R4
10K
R5
1K
R8
2K2
IC1
VCC
BAT
GND
PROG /CHARG
LTC4054
C6
100n
C7
100mf x 10V
BAT1
4.1V
R11
15K
VT4
IRLML6402
S1
PWR
C3
100n
R12
1K
D7
LL4148
D6
LL4148
PB1
R10
100K
PB0
VT3
2N7002
+4.1V
C12
100mf x 10V
C13
100n
IC4
SHDN
FB
GND
VIN
SW
LM2703
L2
22mH
R16
56K
R17
150K
D10
C25
100mf x 10V
C27
100n

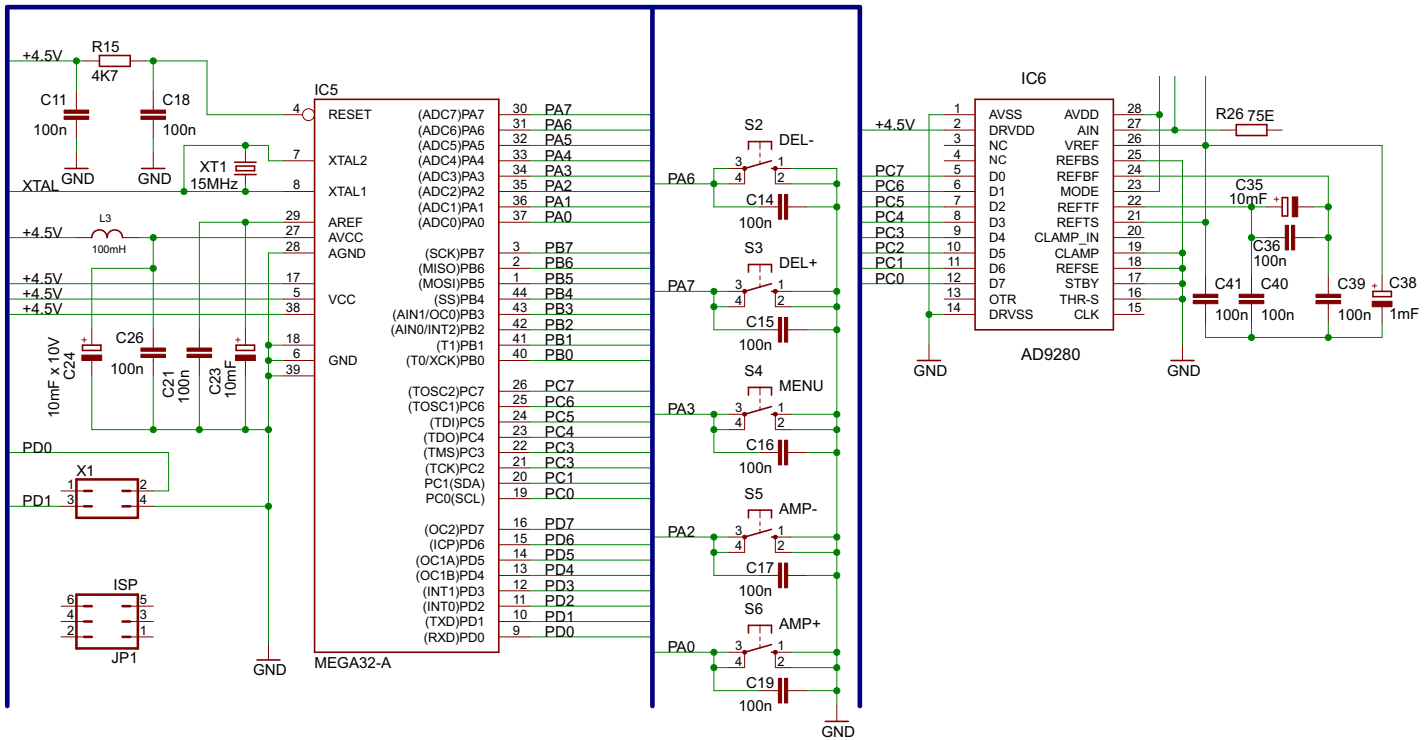
+4.5V
R15
4K7
C11
100n
C18
100n
XTAL
XT1
15MHz
L3
100mH
C26
100n
C21
100n
C23
10mF
C24
10mF x 10V
PD0
PD1
X1
ISP
JP1
IC5
RESET
XTAL2
XTAL1
AREF
AVCC
AGND
VCC
GND
MEGA32-A
(ADC7)PA7
(ADC6)PA6
(ADC5)PA5
(ADC4)PA4
(ADC3)PA3
(ADC2)PA2
(ADC1)PA1
(ADC0)PA0
(SCK)PB7
(MISO)PB6
(MOSI)PB5
(SS)PB4
(AIN1/OC0)PB3
(AIN0/INT2)PB2
(T1)PB1
(T0/XCK)PB0
(TOSC2)PC7
(TOSC1)PC6
(TDI)PC5
(TDO)PC4
(TMS)PC3
(TCK)PC2
PC1(SDA)
PC0(SCL)
(OC2)PD7
(ICP)PD6
(OC1A)PD5
(OC1B)PD4
(INT1)PD3
(INT0)PD2
(TXD)PD1
(RXD)PD0
S2
DEL-
S3
DEL+
S4
MENU
S5
AMP-
S6
AMP+
C14
100n
C15
100n
C16
100n
C17
100n
C19
100n
IC6
AVSS
DRVDD
NC
D0
D1
D2
D3
D4
D5
D6
D7
OTR
DRVSS
AVDD
AIN
VREF
REFBS
REFBF
MODE
REFTF
REFTS
CLAMP_IN
CLAMP
REFSE
STBY
THR-S
CLK
AD9280
R26
75E
C35
10mF
C36
100n
C41
100n
C40
100n
C39
100n
C38
1mF