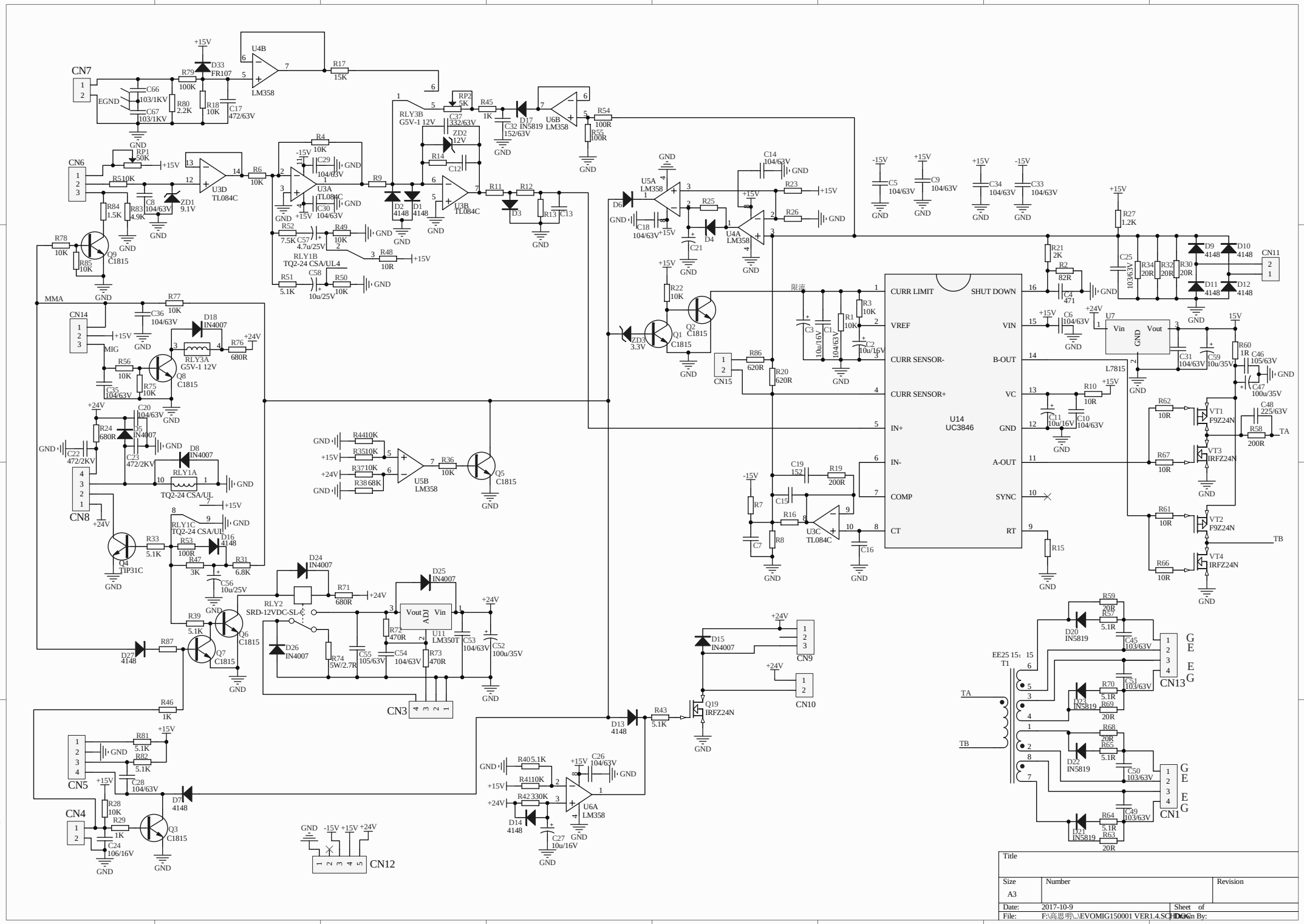

Title		
Size A3	Number	Revision
Date: 2017-10-9	Sheet of	
File: F:\高思明\..\EVOMIG150001 VER1.4.SCHDOC	Drawn By:	