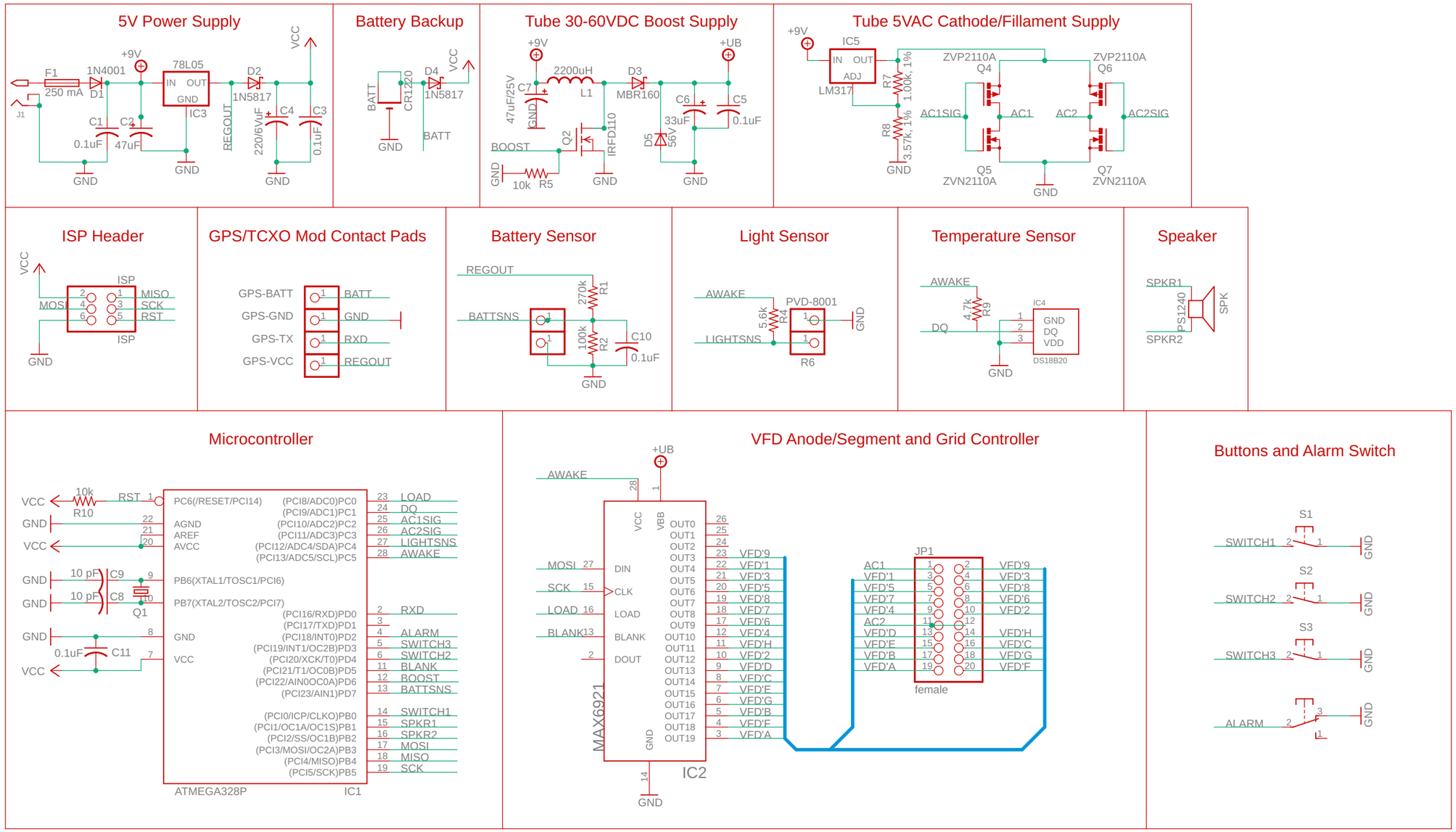

Origonal clock design by Lady Ada of Adafruit

Ice Tube Clock Redesign
xmas-icetube revision d
Redesign by John Archie

mainpcb
24.08.2015 1:56
Sheet: 1/1