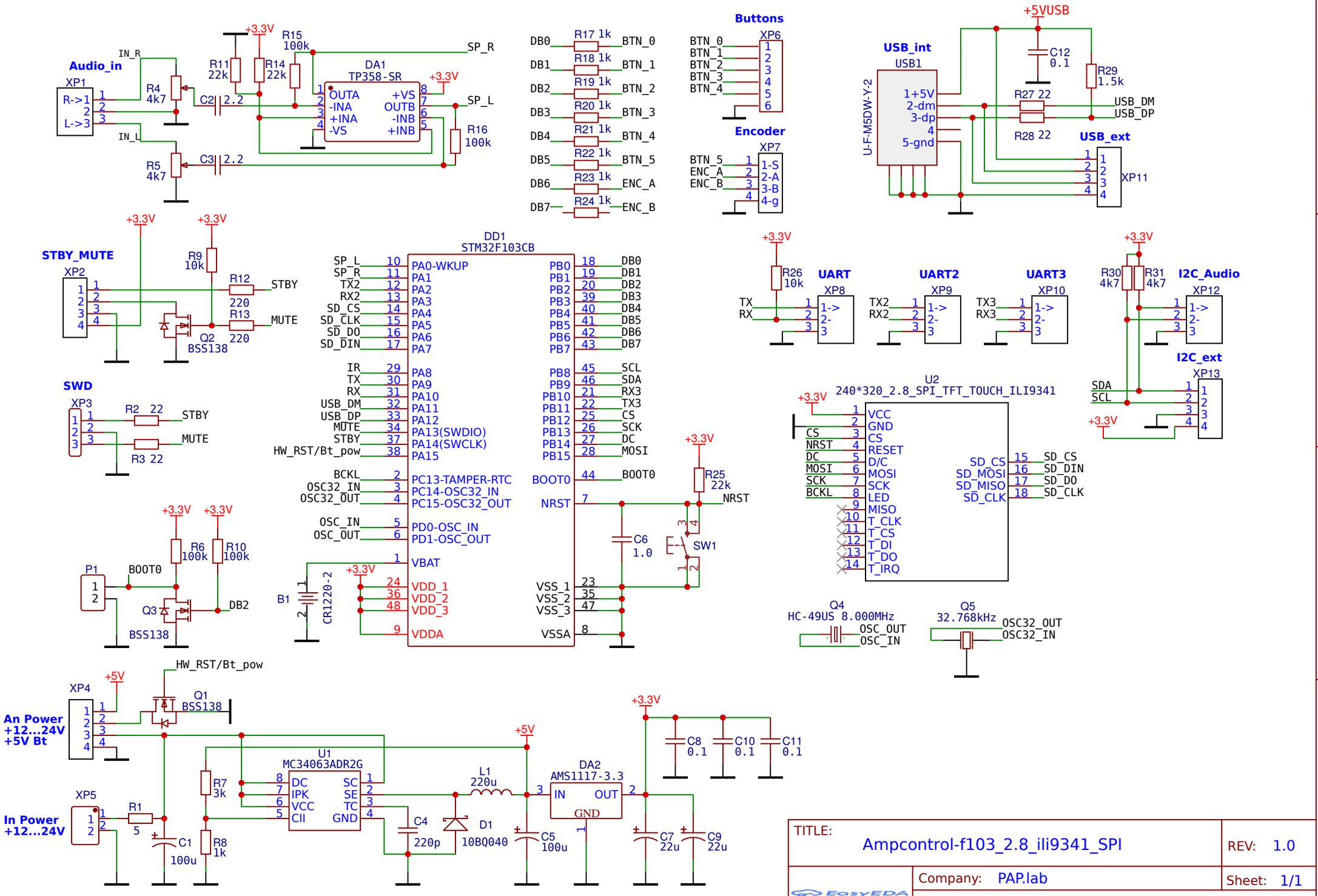
Audio_in
XP1
R-->1
L->3
IN_R
IN_L
R4 4k7
R5 4k7
C2 2.2
C3 2.2
R11 22k
R14 22k
R15 100k
+3.3V
DA1
TP358-SR
OUTA
-INA
+INA
-VS
+VS
OUTB
-INB
+INB
SP_R
SP_L
R16 100k
DB0 R17 1k BTN_0
DB1 R18 1k BTN_1
DB2 R19 1k BTN_2
DB3 R20 1k BTN_3
DB4 R21 1k BTN_4
DB5 R22 1k BTN_5
DB6 R23 1k ENC_A
DB7 R24 1k ENC_B
Buttons
XP6
BTN_0
BTN_1
BTN_2
BTN_3
BTN_4
Encoder
XP7
BTN_5
ENC_A
ENC_B
1-S
2-A
3-B
4-g
+5VUSB
USB_int
USB1
U-F-M5DW-Y-2
1+5V
2-dm
3-dp
4
5-gnd
C12 0.1
R29 1.5k
R27 22
R28 22
USB_DM
USB_DP
USB_ext
XP11
STBY_MUTE
XP2
R9 10k
R12 220
R13 220
STBY
MUTE
Q2 BSS138
SWD
XP3
R2 22
R3 22
DD1
STM32F103CB
SP_L
SP_R
TX2
RX2
SD_CS
SD_CLK
SD_DO
SD_DIN
IR
TX
RX
USB_DM
USB_DP
MUTE
STBY
HW_RST/Bt_pow
BCKL
OSC32_IN
OSC32_OUT
OSC_IN
OSC_OUT
PA0-WKUP
PA1
PA2
PA3
PA4
PA5
PA6
PA7
PA8
PA9
PA10
PA11
PA12
PA13(SWDIO)
PA14(SWCLK)
PA15
PC13-TAMPER-RTC
PC14-OSC32_IN
PC15-OSC32_OUT
PD0-OSC_IN
PD1-OSC_OUT
VBAT
VDD_1
VDD_2
VDD_3
VDDA
PB0
PB1
PB2
PB3
PB4
PB5
PB6
PB7
PB8
PB9
PB10
PB11
PB12
PB13
PB14
PB15
BOOT0
NRST
VSS_1
VSS_2
VSS_3
VSSA
DB0
DB1
DB2
DB3
DB4
DB5
DB6
DB7
SCL
SDA
RX3
TX3
CS
SCK
DC
MOSI
BOOT0
NRST
R25 22k
SW1
C6 1.0
B1 CR1220-2
R6 100k
R10 100k
P1
BOOT0
Q3 BSS138
DB2
UART
XP8
TX
RX
R26 10k
UART2
XP9
TX2
RX2
UART3
XP10
TX3
RX3
R30 4k7
R31 4k7
I2C_Audio
XP12
I2C_ext
XP13
SDA
SCL
U2
240*320_2.8_SPI_TFT_TOUCH_ILI9341
VCC
GND
CS
RESET
D/C
MOSI
SCK
LED
MISO
T_CLK
T_CS
T_DI
T_DO
T_IRQ
SD_CS
SD_MOSI
SD_MISO
SD_CLK
SD_DIN
SD_DO
Q4
HC-49US 8.000MHz
OSC_OUT
OSC_IN
Q5
32.768kHz
OSC32_OUT
OSC32_IN
HW_RST/Bt_pow
XP4
+5V
Q1 BSS138
An Power
+12...24V
+5V Bt
XP5
In Power
+12...24V
R1 5
C1 100u
R7 3k
R8 1k
U1
MC34063ADR2G
DC
IPK
VCC
CII
SC
SE
TC
GND
C4 220p
L1 220u
D1 10BQ040
C5 100u
DA2
AMS1117-3.3
IN
OUT
GND
C8 0.1
C10 0.1
C11 0.1
C7 22u
C9 22u
TITLE:
Ampcontrol-f103_2.8_ili9341_SPI
REV: 1.0
Company: PAP.lab
Sheet: 1/1
Date: 2019-02-12
Drawn By: papbox1@gmail.com
EasyEDA