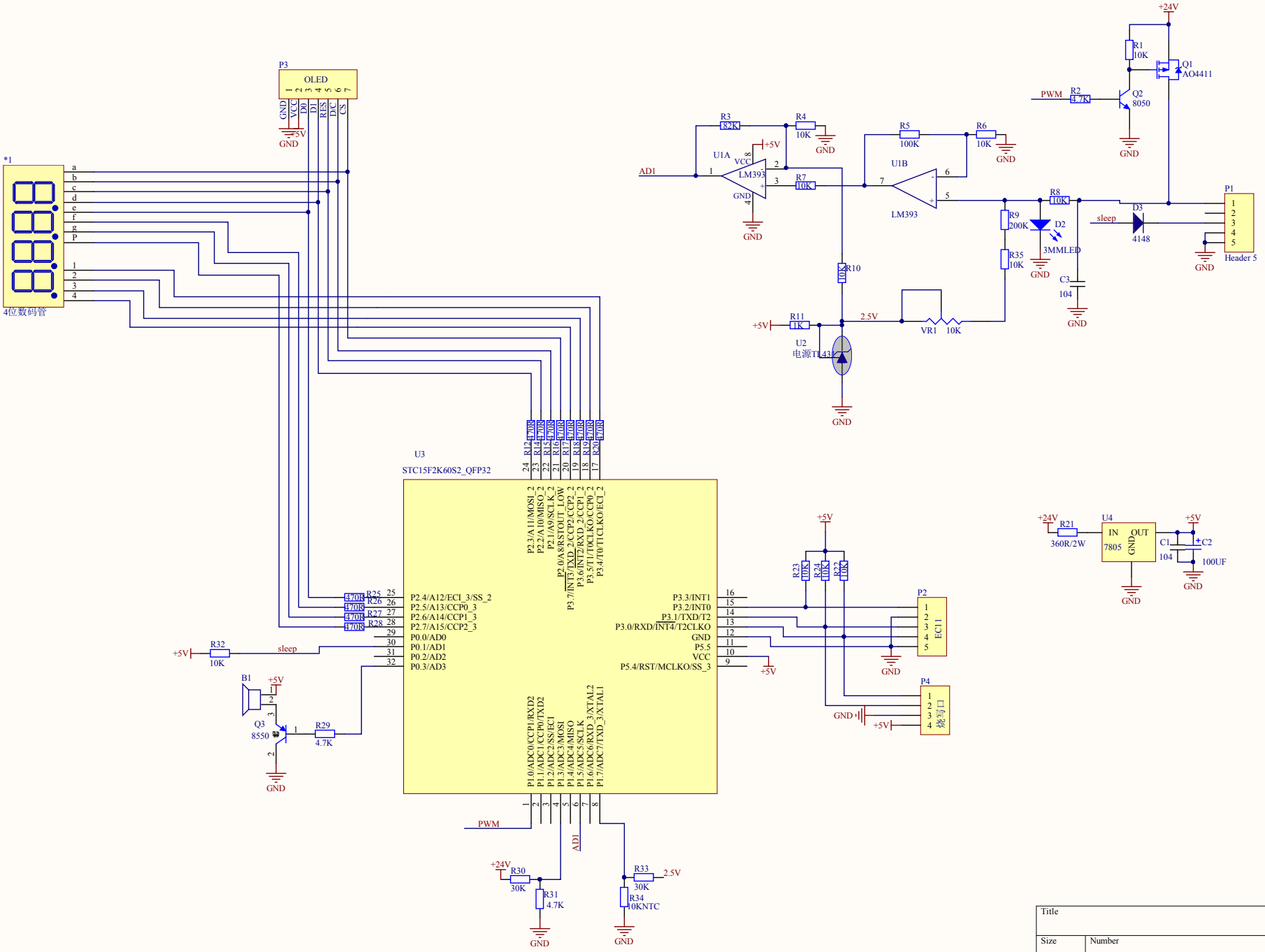

Title		
Size A3	Number	Revision
Date: 2016/9/30		Sheet of
File: C:\Users\..\新版T12控制板.SchDoc		Drawn By: