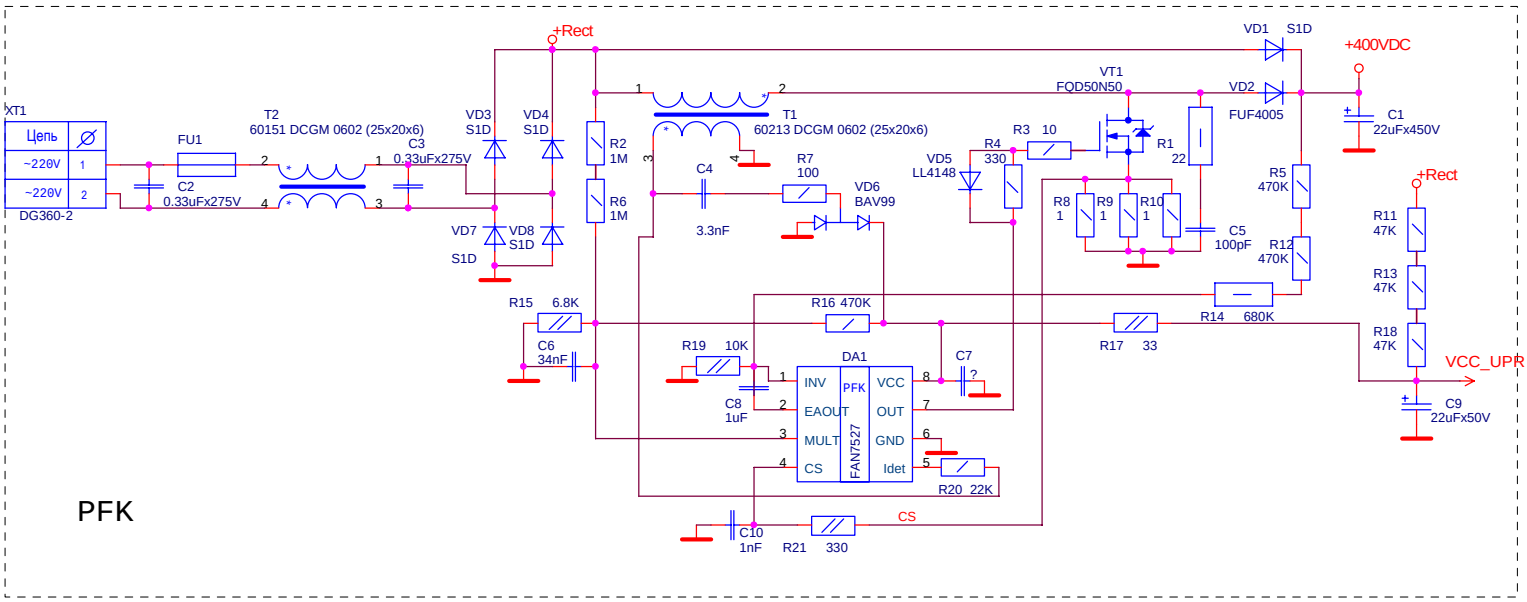
PFK
XT1
Цепь
~220V
~220V
DG360-2
FU1
C2 0.33uFx275V
T2 60151 DCGM 0602 (25x20x6)
C3 0.33uFx275V
VD3 S1D
VD4 S1D
VD7 S1D
VD8 S1D
+Rect
R2 1M
R6 1M
T1 60213 DCGM 0602 (25x20x6)
C4 3.3nF
R7 100
VD6 BAV99
VD5 LL4148
R4 330
R3 10
VT1 FQD50N50
R1 22
VD1 S1D
VD2 FUF4005
+400VDC
C1 22uFx450V
R5 470K
R12 470K
R8 1
R9 1
R10 1
C5 100pF
R11 47K
R13 47K
R18 47K
R14 680K
R15 6.8K
C6 34nF
R16 470K
R17 33
R19 10K
C8 1uF
DA1
INV
EAOUT
MULT
CS
PFK
FAN7527
VCC
OUT
GND
Idet
C7 ?
R20 22K
C10 1nF
R21 330
CS
VCC_UPR
C9 22uFx50V

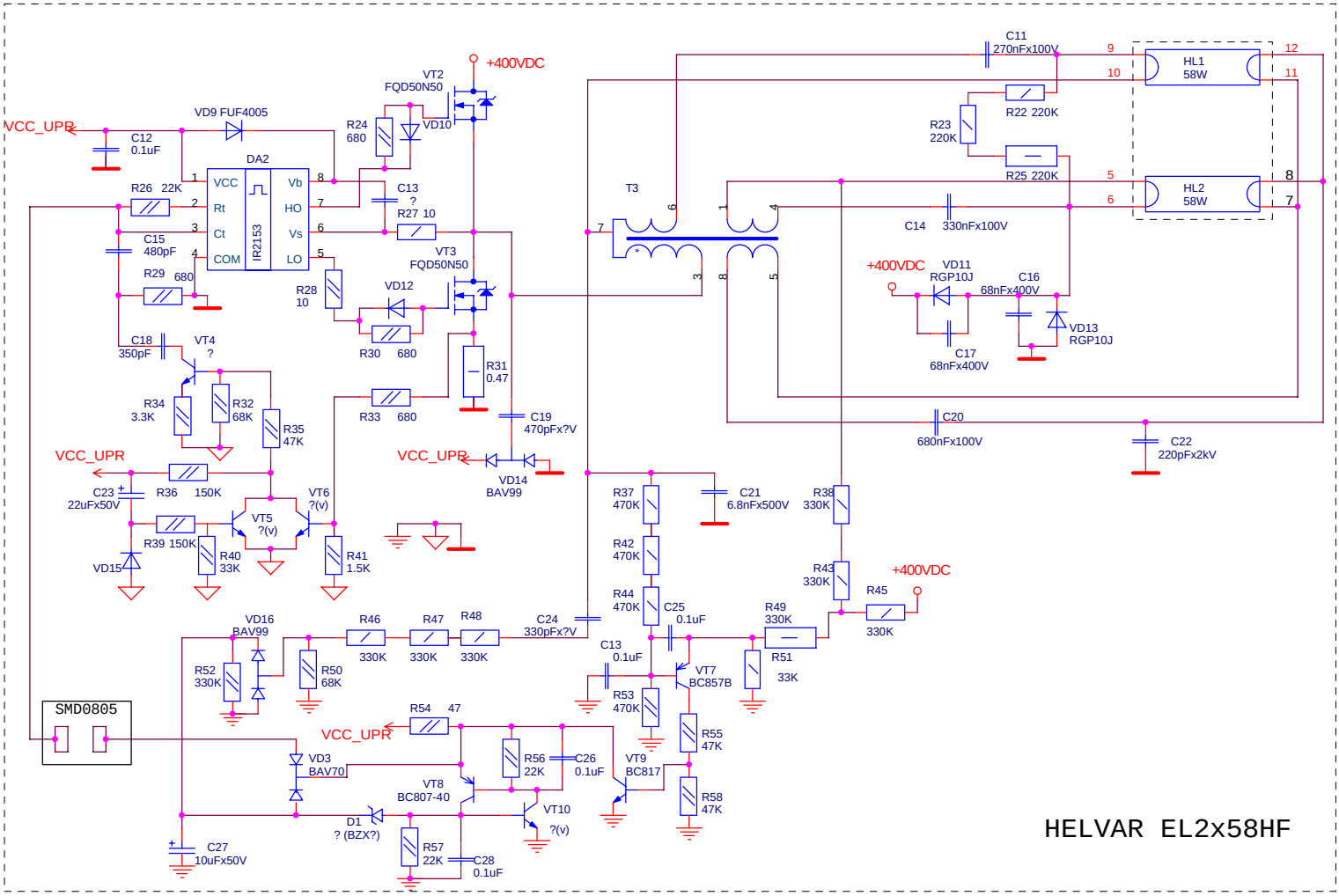
HELVAR EL2x58HF
VCC_UPR
C12 0.1uF
VD9 FUF4005
DA2
IR2153
VCC
Rt
Ct
COM
Vb
HO
Vs
LO
R26 22K
C15 480pF
R29 680
R24 680
VT2 FQD50N50
VD10
C13 ?
R27 10
R28 10
VD12
VT3 FQD50N50
R30 680
R31 0.47
C18 350pF
VT4 ?
R34 3.3K
R32 68K
R35 47K
R33 680
C19 470pFx?V
VD14 BAV99
C23 22uFx50V
R36 150K
VT5 ?(v)
VT6 ?(v)
R39 150K
R40 33K
R41 1.5K
VD15
T3
C11 270nFx100V
HL1 58W
HL2 58W
R22 220K
R23 220K
R25 220K
C14 330nFx100V
VD11 RGP10J
C16 68nFx400V
C17 68nFx400V
VD13 RGP10J
C20 680nFx100V
C22 220pFx2kV
R37 470K
R42 470K
R44 470K
C21 6.8nFx500V
R38 330K
R43 330K
R45 330K
C25 0.1uF
R49 330K
R51 33K
VT7 BC857B
C13 0.1uF
R53 470K
R55 47K
R58 47K
VT9 BC817
VD16 BAV99
R46 330K
R47 330K
R48 330K
C24 330pFx?V
R52 330K
R50 68K
SMD0805
R54 47
VD3 BAV70
VT8 BC807-40
R56 22K
C26 0.1uF
VT10 ?(v)
D1 ? (BZX?)
R57 22K
C28 0.1uF
C27 10uFx50V