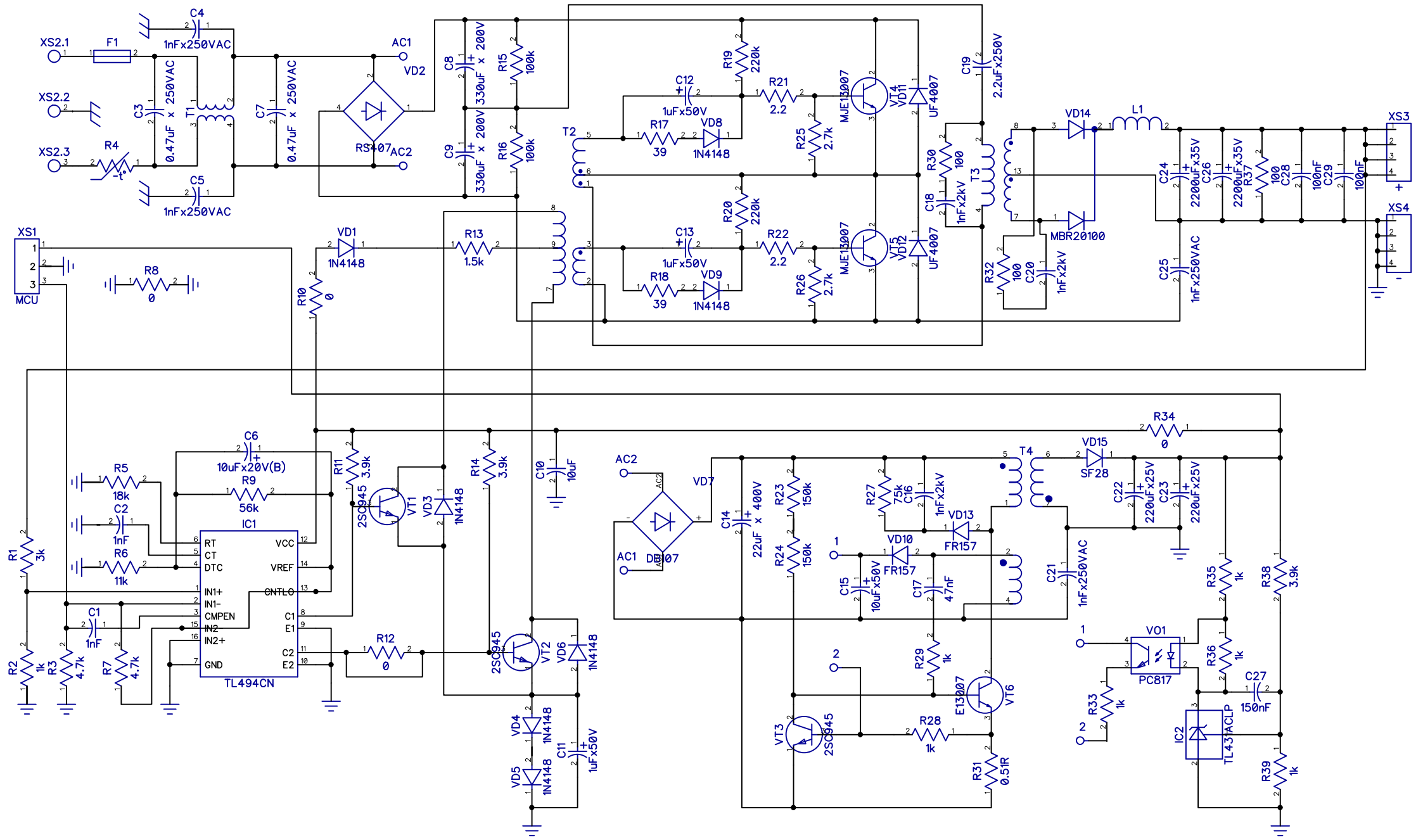
XS2.1
XS2.2
XS2.3
F1
R4
C4
1nFx250VAC
C5
1nFx250VAC
C3
0.47uF x 250VAC
T1
C7
0.47uF x 250VAC
AC1
AC2
VD2
RS407
C8
330uF x 200V
C9
330uF x 200V
R15
100k
R16
100k
T2
R19
220k
R20
220k
C12
1uFx50V
C13
1uFx50V
R17
39
R18
39
VD8
1N4148
VD9
1N4148
R21
2.2
R22
2.2
R25
2.7k
R26
2.7k
MJE13007
VT4
VT5
VD11
VD12
UF4007
C19
2.2uFx250V
R30
100
R32
100
C18
1nFx2kV
C20
1nFx2kV
T3
VD14
L1
MBR20100
C24
2200uFx35V
C26
2200uFx35V
R37
100
C28
100nF
C29
100nF
C25
1nFx250VAC
XS3
XS4
XS1
MCU
R8
0
VD1
1N4148
R13
1.5k
R10
0
C6
10uFx20V(B)
R9
56k
R5
18k
C2
1nF
R6
11k
IC1
RT
CT
DTC
IN1+
IN1-
CMPEN
IN2-
IN2+
GND
VCC
VREF
CNTLO
C1
E1
C2
E2
TL494CN
R1
3k
R2
1k
R3
4.7k
R7
4.7k
C1
1nF
R11
3.9k
2SC945
VT1
VD3
1N4148
R14
3.9k
C10
10uF
R12
0
2SC945
VT2
VD6
1N4148
VD4
1N4148
VD5
1N4148
C11
1uFx50V
AC2
AC1
DB107
VD7
C14
22uF x 400V
R23
150k
R24
150k
R27
75k
C16
1nFx2kV
VD13
FR157
VD10
FR157
C15
10uFx50V
C17
47nF
R29
1k
VT3
2SC945
R28
1k
E13007
VT6
R31
0.5IR
T4
VD15
SF28
R34
0
C22
220uFx25V
C23
220uFx25V
C21
1nFx250VAC
R35
1k
R38
3.9k
VO1
PC817
R33
1k
R36
1k
C27
150nF
IC2
TL431ACLP
R39
1k