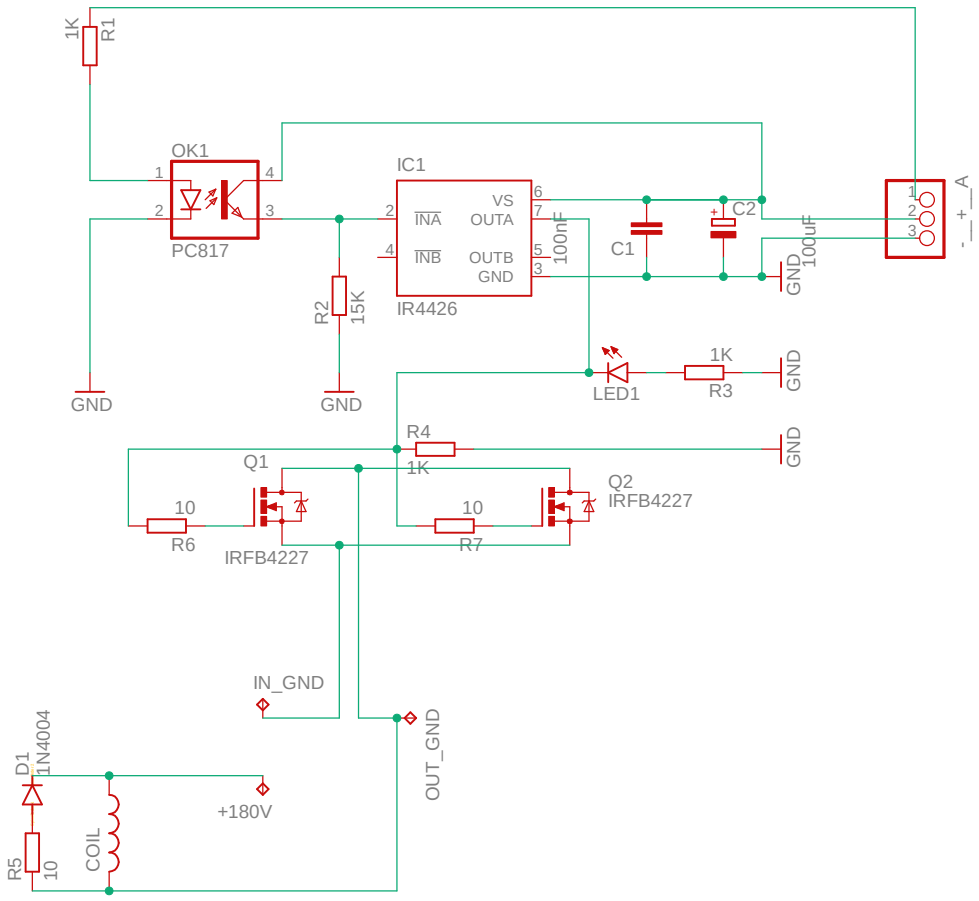
1K
R1
OK1
PC817
IC1
VS
INA
OUTA
INB
OUTB
GND
IR4426
R2
15K
GND
GND
C1
100nF
C2
100uF
GND
LED1
1K
R3
GND
R4
1K
GND
Q1
IRFB4227
10
R6
10
R7
Q2
IRFB4227
IN_GND
OUT_GND
D1
1N4004
R5
10
COIL
+180V
- __ + __ A