| REVISION RECORD | | | |
|---|---|---|---|
| LTR | ECO NO: | APPROVED: | DATE: |
| | | | |
| | | | |
| | | | |
| | | | |

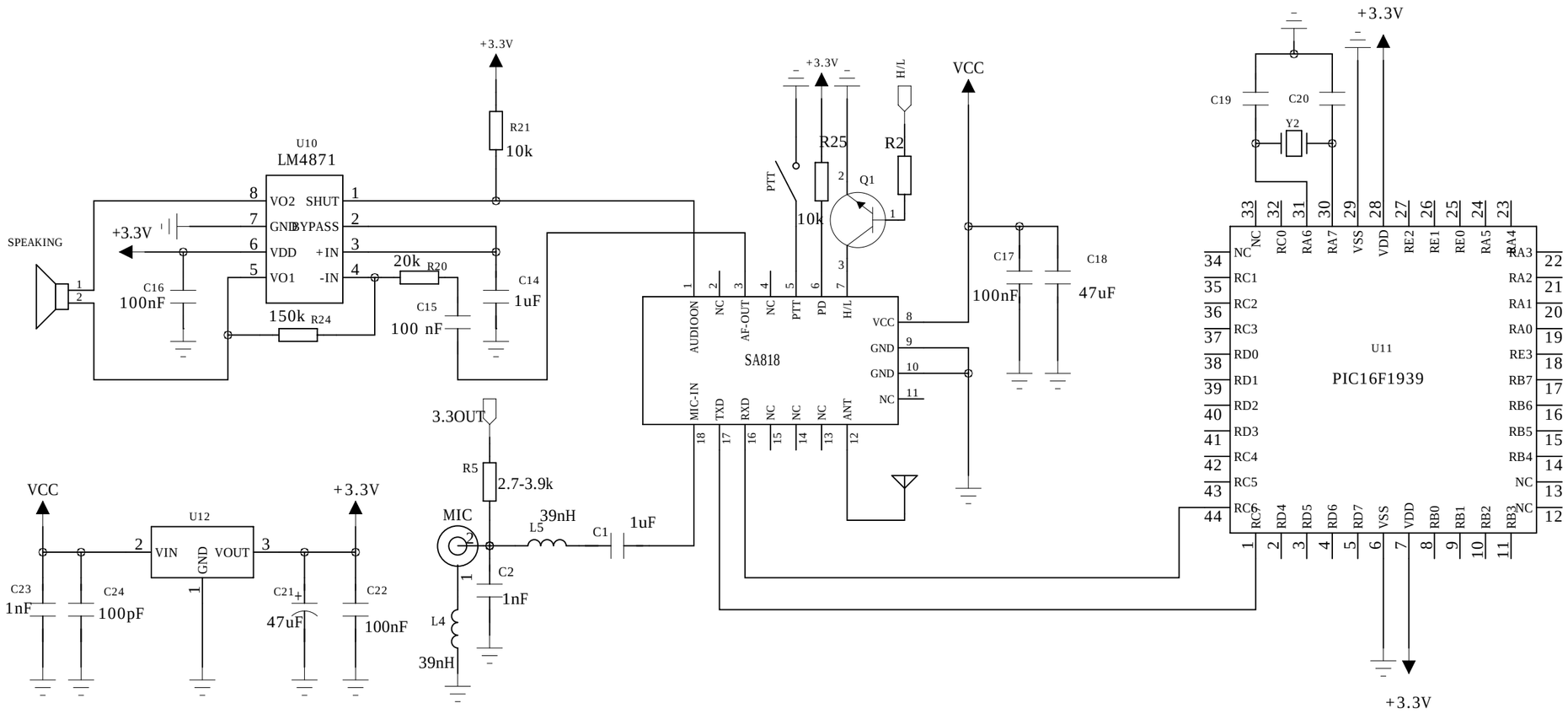


| | | | |
|---|---|---|---|
| DRAWN: Yuan | DATED: 2011.09.05 | COMPANY: NICERF | |
| CHECKED: | DATED: | TITLE: SA818 | |
| QUALITY CONTROL: | DATED: | CODE: | SIZE: |
| RELEASED: | DATED: | DRAWING NO: | REV: v1.0 |
| | | SCALE: <Scale> | SHEET: 1 OF 1 |