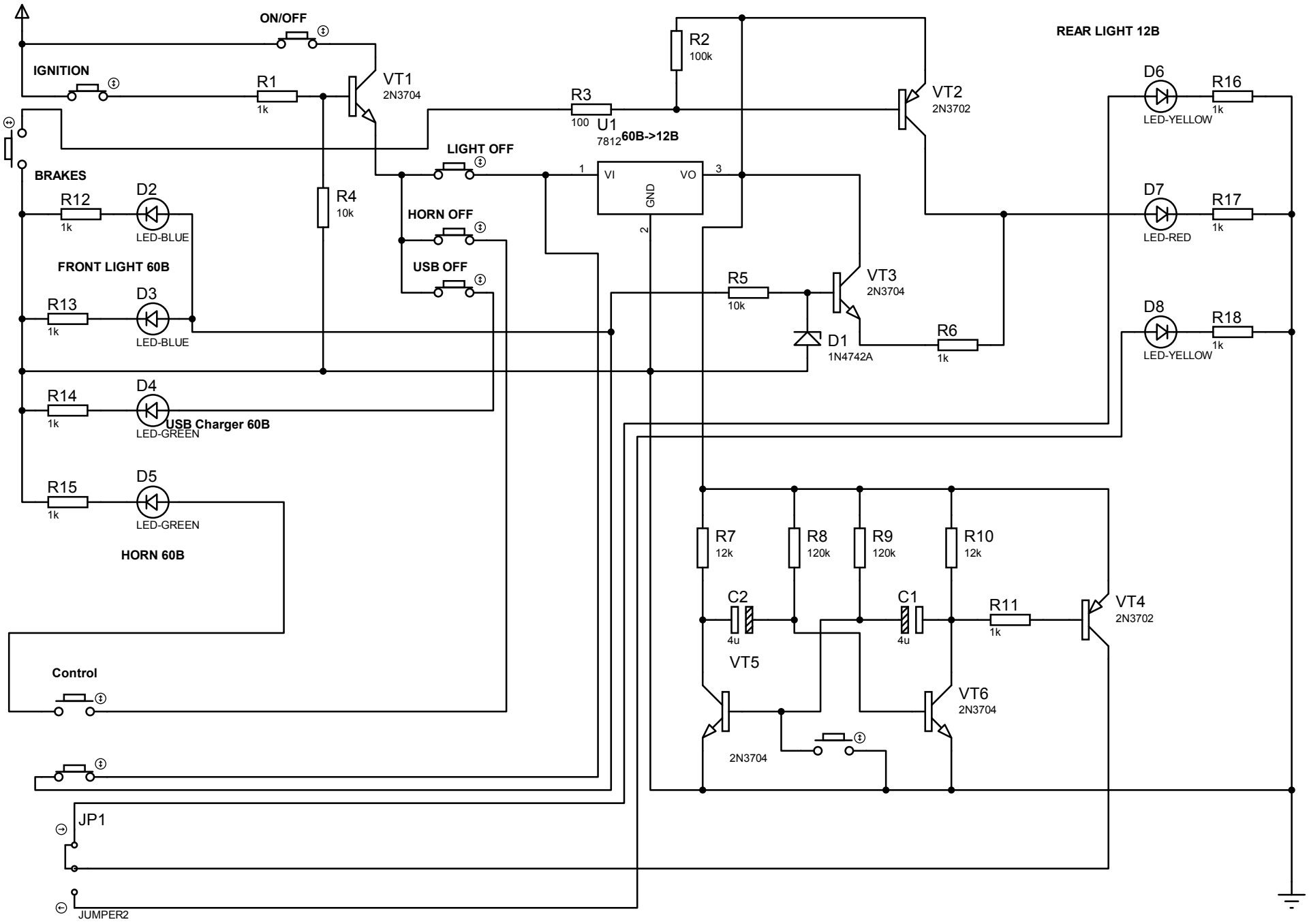
ON/OFF
IGNITION
R1
1k
VT1
2N3704
R2
100k
R3
100
U1
7812
60B->12B
VT2
2N3702
REAR LIGHT 12B
D6
R16
1k
LED-YELLOW
LIGHT OFF
BRAKES
R12
1k
D2
LED-BLUE
R4
10k
HORN OFF
USB OFF
VI
VO
GND
1
2
3
D7
R17
1k
LED-RED
FRONT LIGHT 60B
R13
1k
D3
LED-BLUE
R5
10k
VT3
2N3704
D1
1N4742A
R6
1k
D8
R18
1k
LED-YELLOW
R14
1k
D4
LED-GREEN
USB Charger 60B
R15
1k
D5
LED-GREEN
HORN 60B
R7
12k
R8
120k
R9
120k
R10
12k
C2
4u
C1
4u
R11
1k
VT4
2N3702
VT5
2N3704
VT6
2N3704
Control
JP1
JUMPER2