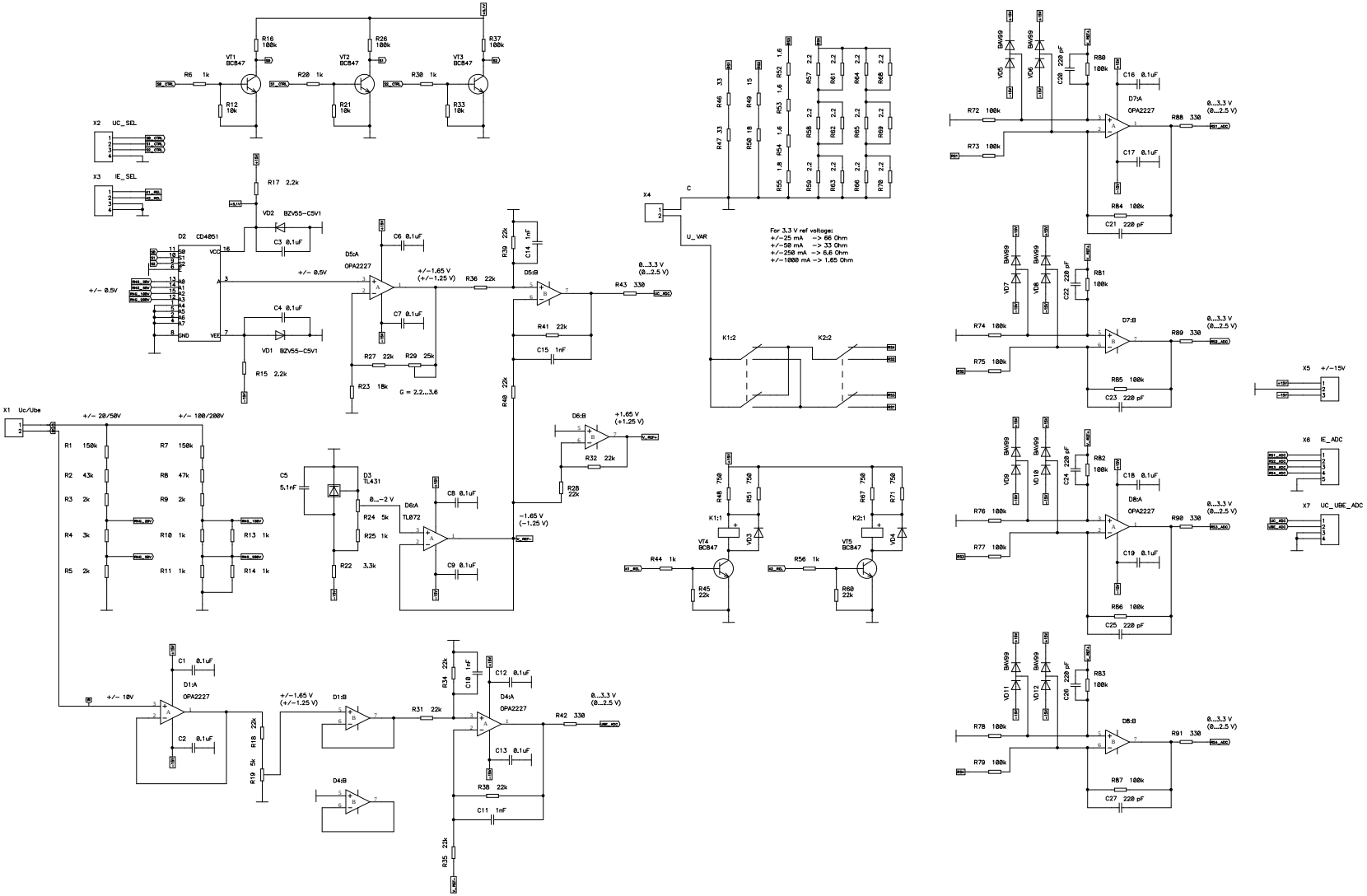

Title	CT Measure Unit	
Size A1	Number	Rev 2.0
Date	Drawn by	
Filename	Sheet of	