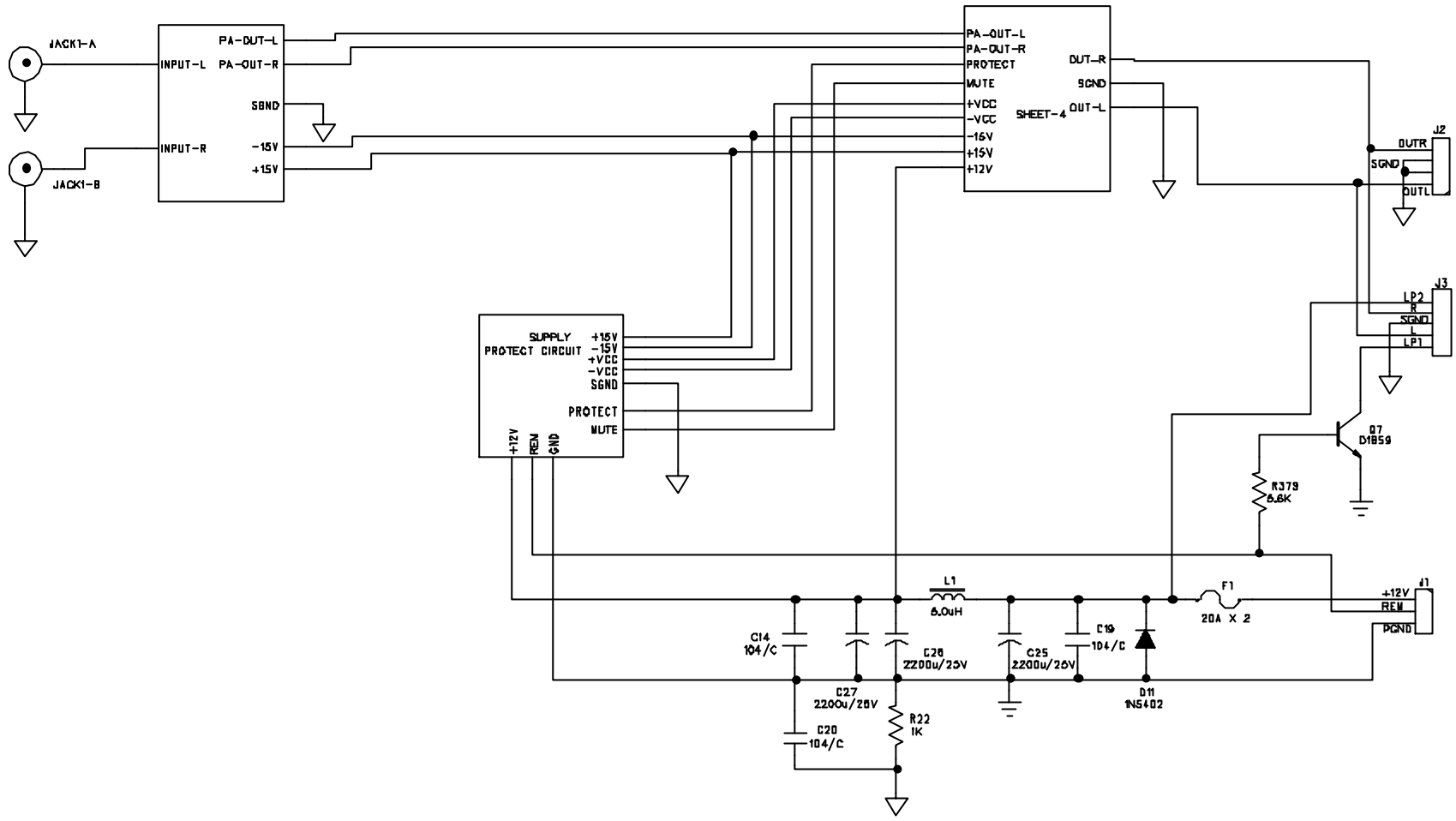

TITLE					
V2200					
DRAWN: WC.W	DATED: 2002 3 20	CHECKED:	DATED.	APPROVED.	DATED.
DWG NO.: PT-1-M0511-12	SCALE:1:1	SIZE:A3	REV:1.00	SHEET: 1/4	