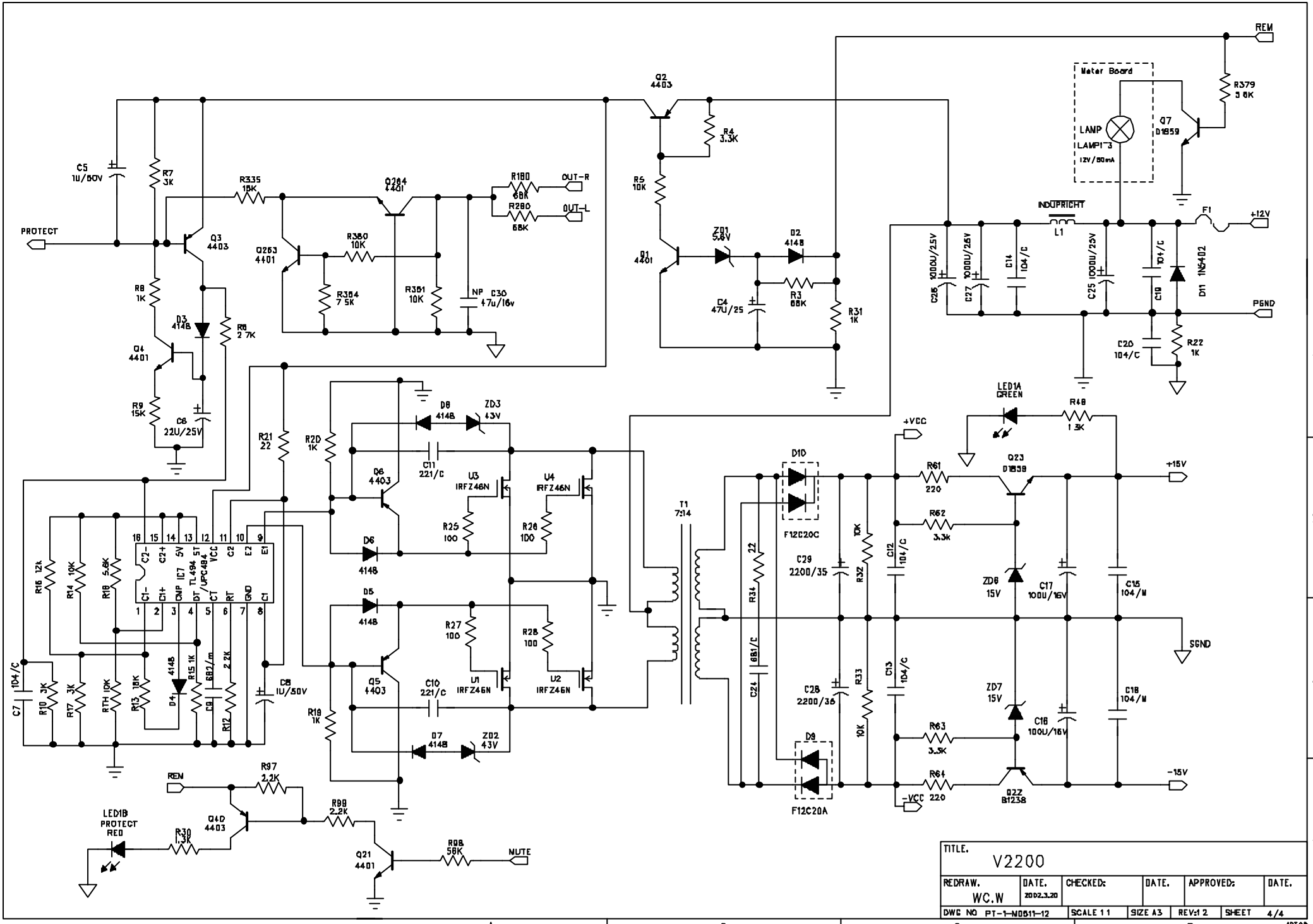

TITLE.					
V2200					
REDRAW. WC.W	DATE. 2002.3.20	CHECKED:	DATE.	APPROVED:	DATE.
DWG NO PT-1-N0511-12	SCALE 1:1	SIZE A3	REV:1.2	SHEET 4/4	

ARTCO