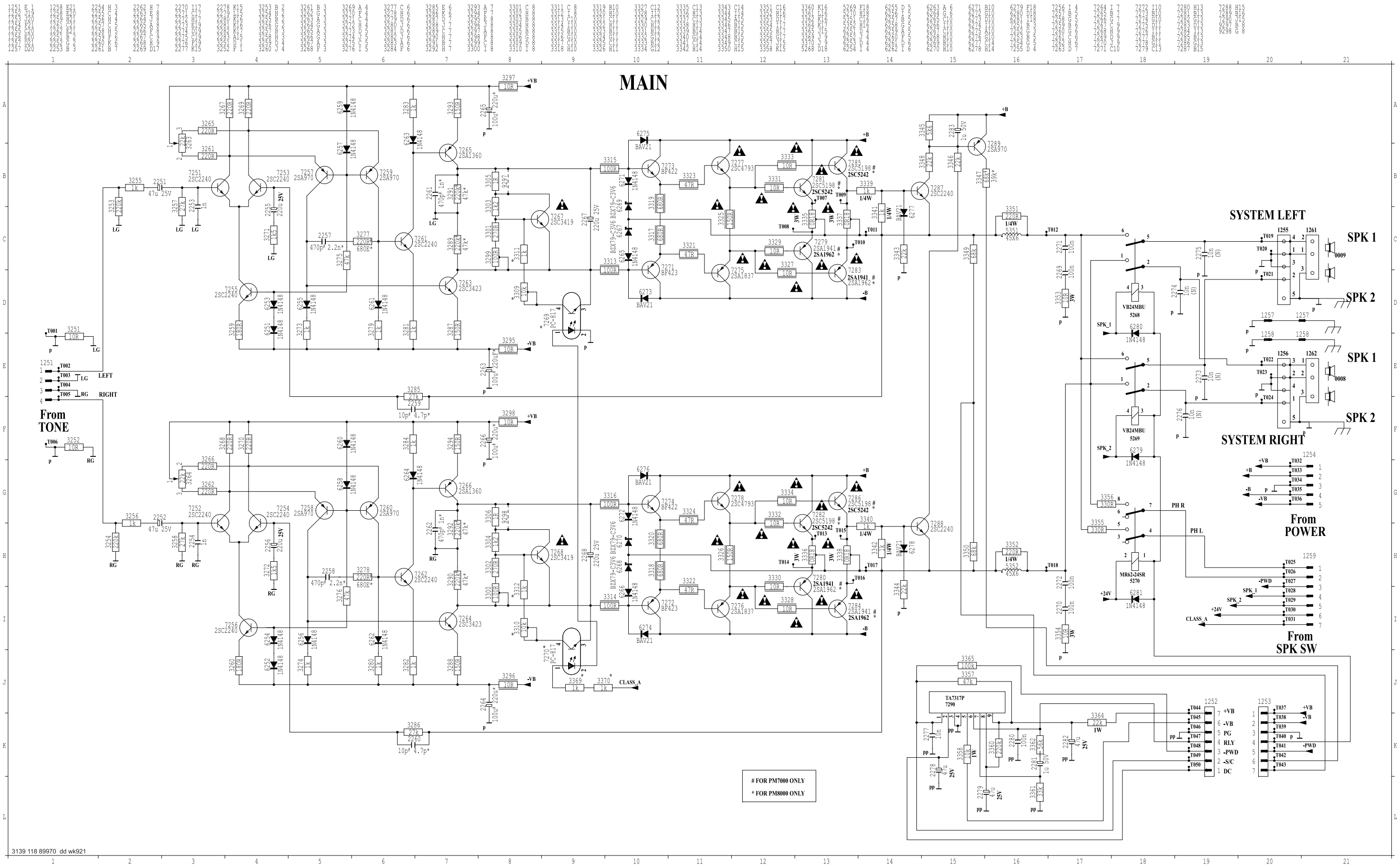MAIN CIRCUIT