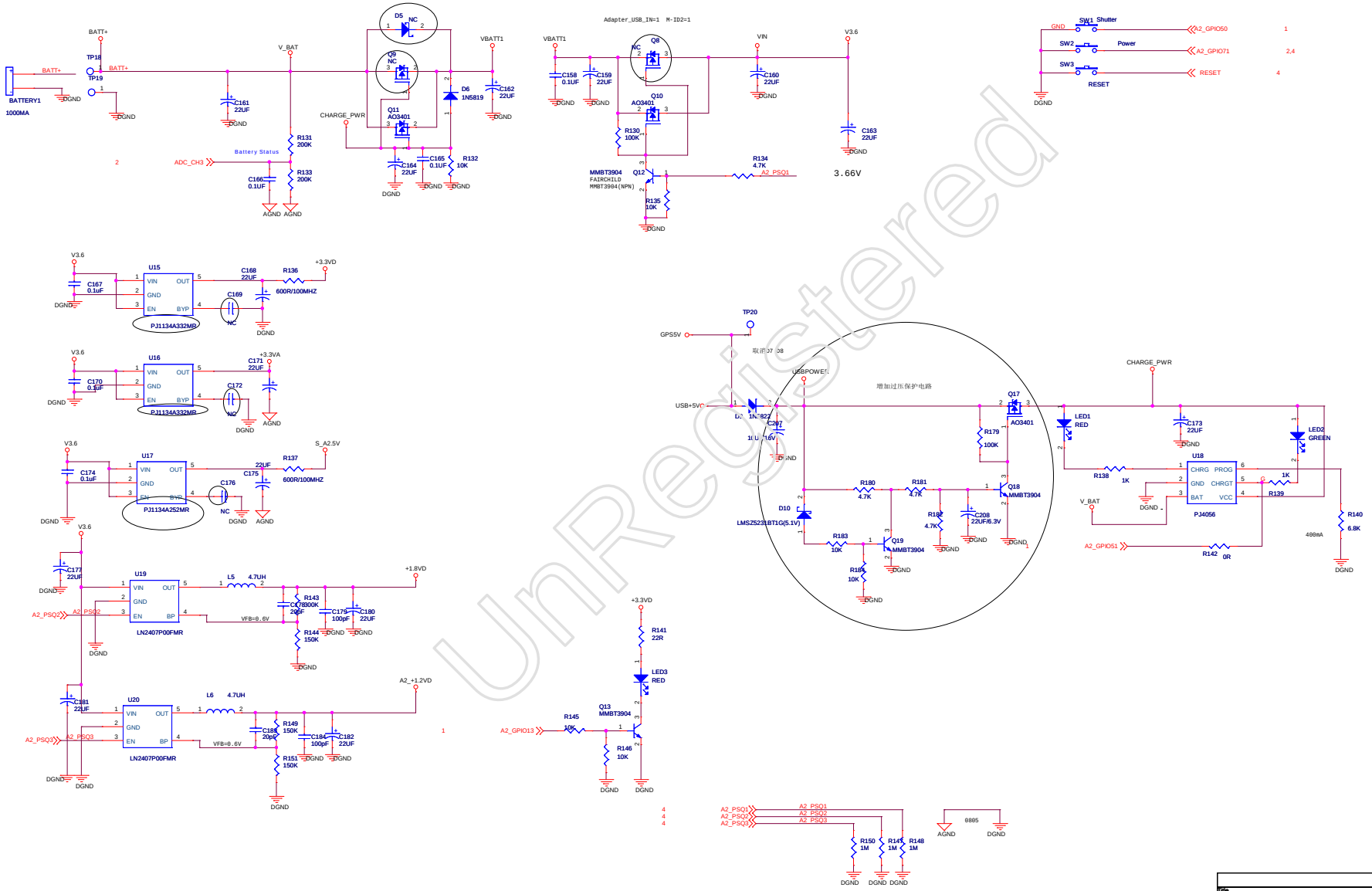

UnRegistered

Title	CHDV5H2	
Size A2	Document Number <Doc>	Rev 01
Date: Wednesday, June 01, 2011	Sheet 6 of 7	