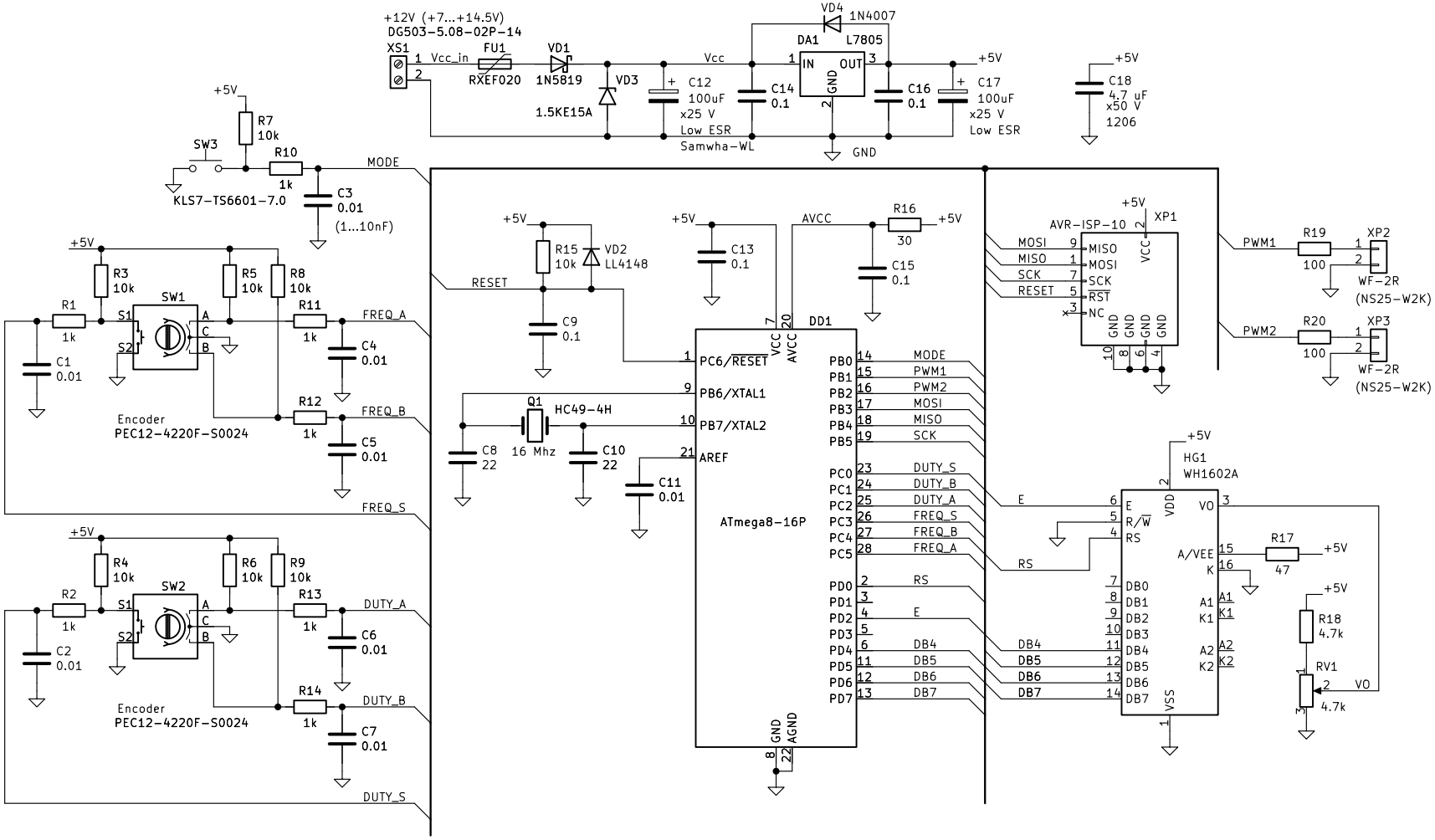
+12V (+7...+14.5V)
DG503-5.08-02P-14
XS1
Vcc_in
FU1
RXEF020
VD1
1N5819
VD3
1.5KE15A
Vcc
C12
100uF
x25 V
Low ESR
Samwha-WL
C14
0.1
VD4
1N4007
DA1
L7805
IN
OUT
GND
C16
0.1
C17
100uF
x25 V
Low ESR
+5V
C18
4.7 uF
x50 V
1206
SW3
KLS7-TS6601-7.0
R7
10k
R10
1k
C3
0.01
(1...10nF)
MODE
R1
1k
R3
10k
SW1
R5
10k
R8
10k
R11
1k
FREQ_A
C1
0.01
C4
0.01
R12
1k
FREQ_B
C5
0.01
FREQ_S
Encoder
PEC12-4220F-S0024
R2
1k
R4
10k
SW2
R6
10k
R9
10k
R13
1k
DUTY_A
C2
0.01
C6
0.01
R14
1k
DUTY_B
C7
0.01
DUTY_S
Encoder
PEC12-4220F-S0024
R15
10k
VD2
LL4148
RESET
C9
0.1
C13
0.1
AVCC
R16
30
C15
0.1
Q1
HC49-4H
16 Mhz
C8
22
C10
22
C11
0.01
DD1
ATmega8-16P
PC6/RESET
PB6/XTAL1
PB7/XTAL2
AREF
VCC
AVCC
GND
AGND
PB0
PB1
PB2
PB3
PB4
PB5
PC0
PC1
PC2
PC3
PC4
PC5
PD0
PD1
PD2
PD3
PD4
PD5
PD6
PD7
AVR-ISP-10
XP1
MOSI
MISO
SCK
RESET
RST
NC
PWM1
R19
100
XP2
WF-2R
(NS25-W2K)
PWM2
R20
100
XP3
WF-2R
(NS25-W2K)
HG1
WH1602A
E
R/W
RS
VDD
VO
A/VEE
K
DB0
DB1
DB2
DB3
DB4
DB5
DB6
DB7
VSS
A1
K1
A2
K2
R17
47
R18
4.7k
RV1
4.7k