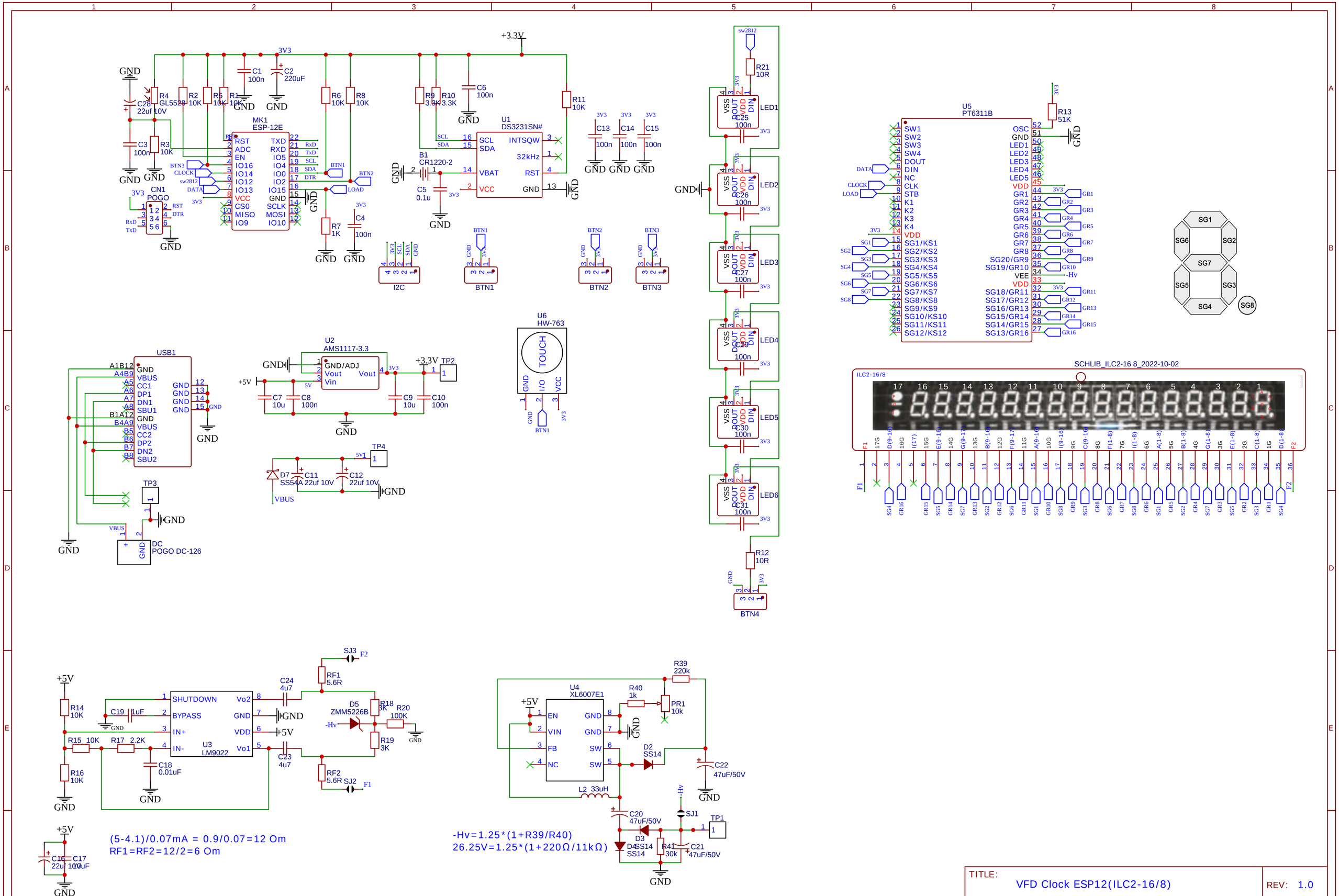
MK1
ESP-12E
U1
DS3231SN#
B1
CR1220-2
U5
PT6311B
U6
HW-763
TOUCH
U2
AMS1117-3.3
USB1
DC
POGO DC-126
CN1
POGO
I2C
BTN1
BTN2
BTN3
BTN4
LED1
LED2
LED3
LED4
LED5
LED6
SCHLIB_ILC2-16 8_2022-10-02
ILC2-16/8
U3
LM9022
U4
XL6007E1
(5-4.1)/0.07mA = 0.9/0.07=12 Om
RF1=RF2=12/2=6 Om
-Hv=1.25*(1+R39/R40)
26.25V=1.25*(1+220Ω/11kΩ)
TITLE:
VFD Clock ESP12(ILC2-16/8)
REV: 1.0
Company: UA
Sheet: 1/1
Date: 2022-10-03
Drawn By: leoloel