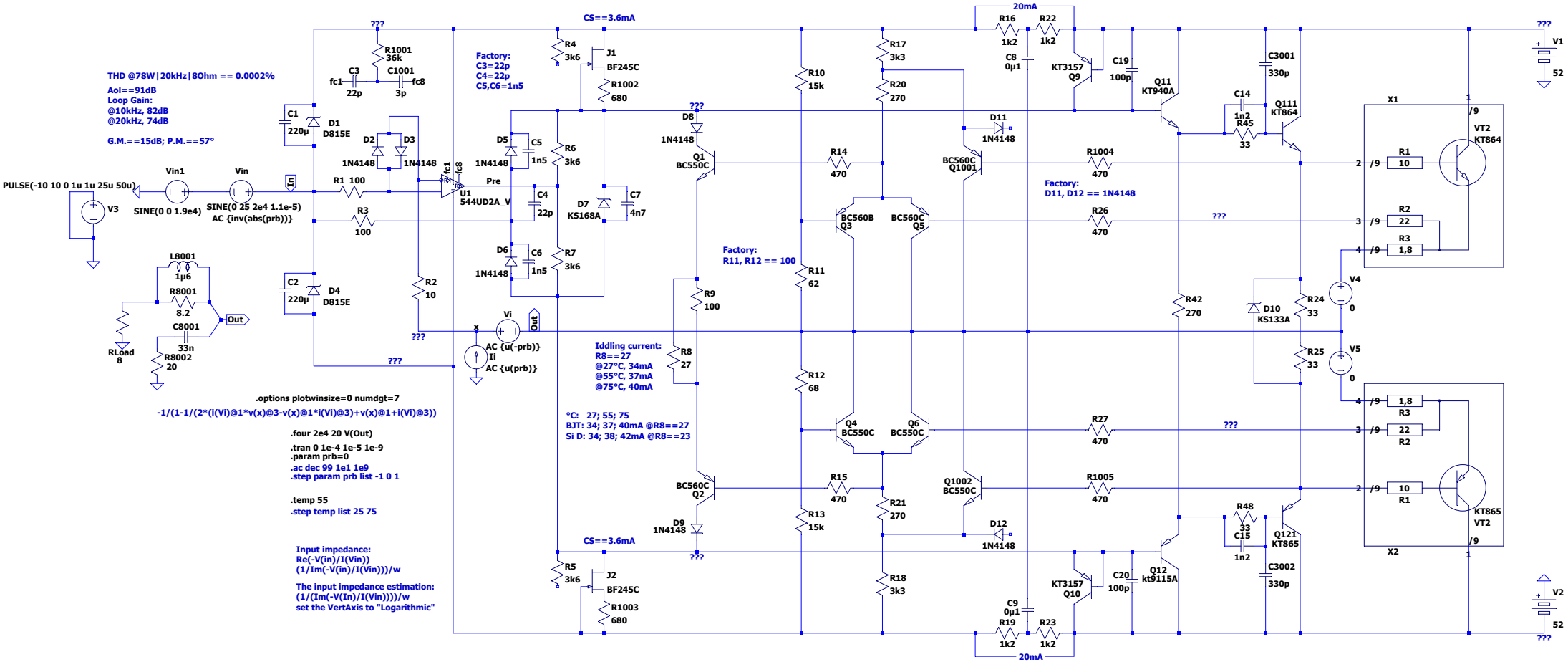

--- C:\Users\zao\Documents\LTspiceXVII\088-A2_real-opamp-subs_bias-check.asc ---