IN-17 / 74HC390 nixie clock

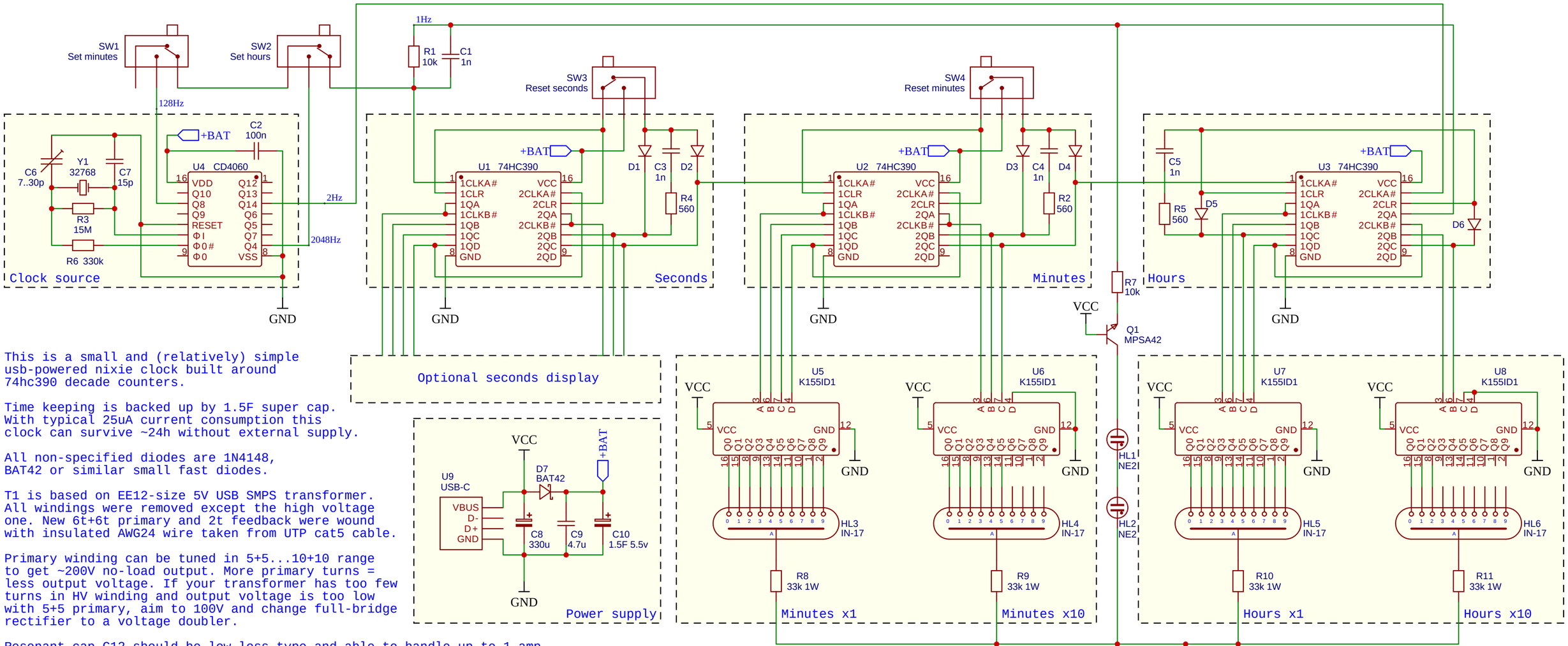

This is a small and (relatively) simple usb-powered nixie clock built around 74hc390 decade counters.

Time keeping is backed up by 1.5F super cap. With typical 25uA current consumption this clock can survive ~24h without external supply.

All non-specified diodes are 1N4148, BAT42 or similar small fast diodes.

T1 is based on EE12-size 5V USB SMPS transformer. All windings were removed except the high voltage one. New 6t+6t primary and 2t feedback were wound with insulated AWG24 wire taken from UTP cat5 cable.

Primary winding can be tuned in 5+5...10+10 range to get ~200V no-load output. More primary turns = less output voltage. If your transformer has too few turns in HV winding and output voltage is too low with 5+5 primary, aim to 100V and change full-bridge rectifier to a voltage doubler.

Resonant cap C12 should be low-loss type and able to handle up to 1 amp at 200kHz working frequency. MKPs (polypropylene film) are best but bulky, MKT/MKS and ceramic caps from CFL driver circuits have higher losses but may be an acceptable choice.
Check no-load current consumption of HV supply. It should be 50-70ma. If numbers are much bigger, try other C12 values from 10n to 100n. Lower values tend to increase efficiency and output voltage drop under load.

Brightness control uses frequency modulation with fixed 150us pulse width. The circuit is designed with low drive capability 4000 series ICs in mind. 74HC equivalents will need 0.5-1k resistors in series with C13 and C15 to avoid exceeding maximum current ratings.

LDRs should have gamma value close to 1.0 (preferably >= 0.9) to get a good brightness response curve. Devices with higher resistance values tend to have more linear response within the same product line.

Adjust C11 to get comfortable brightness in typical lighting conditions. Then adjust R18 to set the minimum brightness in dark environment. If no dark room is available for testing, disconnect LDRs, connect oscilloscope to oscillator output and adjust R18 to get ~150Hz frequency.

Feel free to contact me with any questions,
Yuriy 'zangy' Berdnikov
zang4s@gmail.com