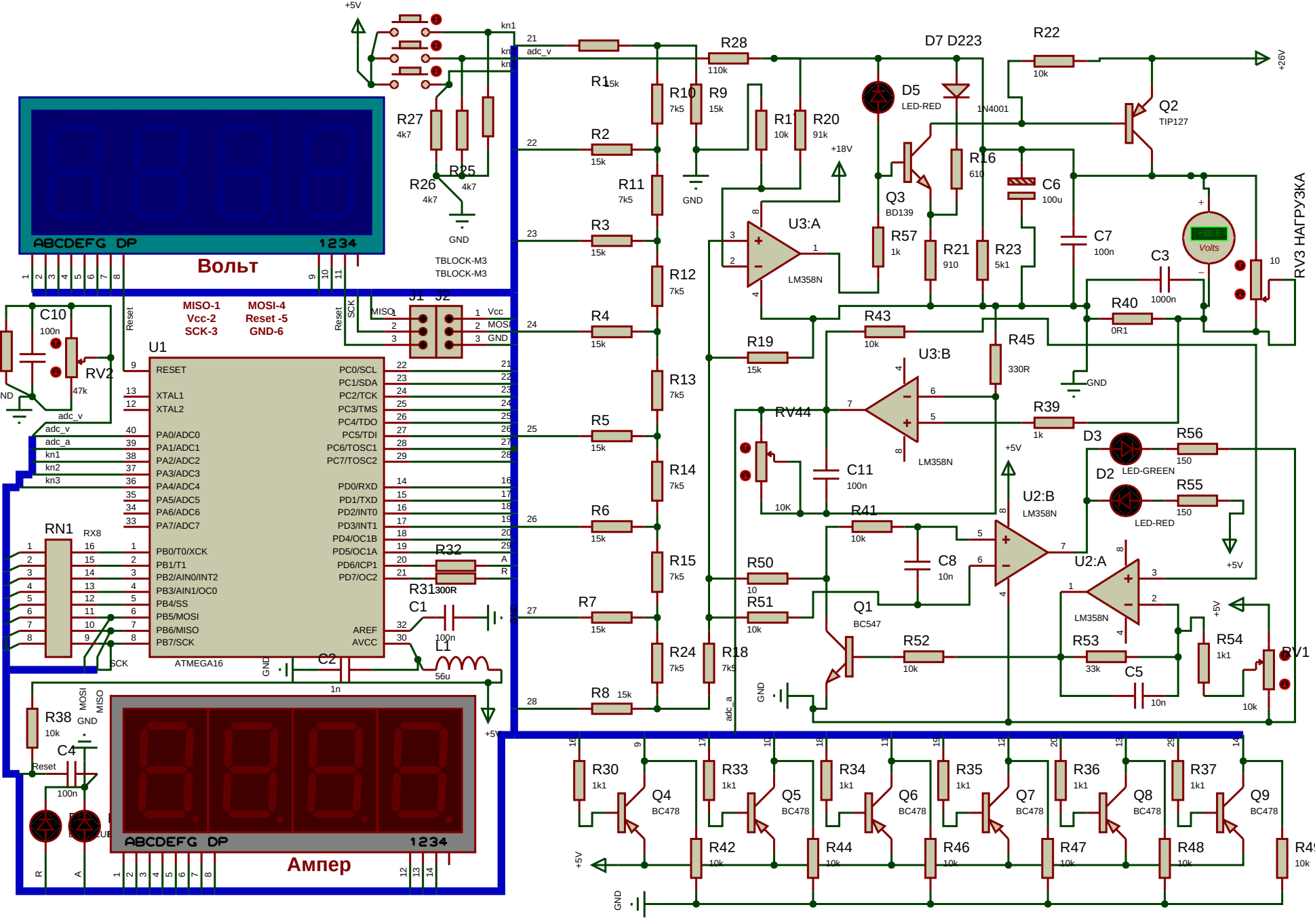
Вольт
Ампер
ABCDEFG DP 1234
ATMEGA16
U1
MISO-1
Vcc-2
SCK-3
MOSI-4
Reset -5
GND-6
J1 J2
TBLOCK-M3
TBLOCK-M3
RV3 НАГРУЗКА
+26V
+18V
+5V
GND
D7 D223
1N4001
D5
LED-RED
D3
D2
LED-GREEN
LED-RED
Q1
BC547
Q2
TIP127
Q3
BD139
Q4
BC478
Q5
BC478
Q6
BC478
Q7
BC478
Q8
BC478
Q9
BC478
U3:A
U3:B
U2:A
U2:B
LM358N
RV1
RV2
RV44
RN1
RX8
R1 15k
R2 15k
R3 15k
R4 15k
R5 15k
R6 15k
R7 15k
R8 15k
R9 15k
R10 7k5
R11 7k5
R12 7k5
R13 7k5
R14 7k5
R15 7k5
R16 610
R18 7k5
R19 15k
R20 91k
R21 910
R22 10k
R23 5k1
R24 7k5
R25 4k7
R26 4k7
R27 4k7
R28 110k
R30 1k1
R31 300R
R32
R33 1k1
R34 1k1
R35 1k1
R36 1k1
R37 1k1
R38 10k
R40 0R1
R41 10k
R42 10k
R43 10k
R44 10k
R45 330R
R46 10k
R47 10k
R48 10k
R49 10k
R50 10
R51 10k
R52 10k
R53 33k
R54 1k1
R55 150
R56 150
R57 1k
R39 1k
C1 100n
C2 1n
C3 1000n
C4 100n
C5 10n
C6 100u
C7 100n
C8 10n
C10 100n
C11 100n
L1 56u
kn1
kn2
kn3
adc_v
adc_a
Reset
SCK
MISO
MOSI
Vcc
GND
+88.8
Volts