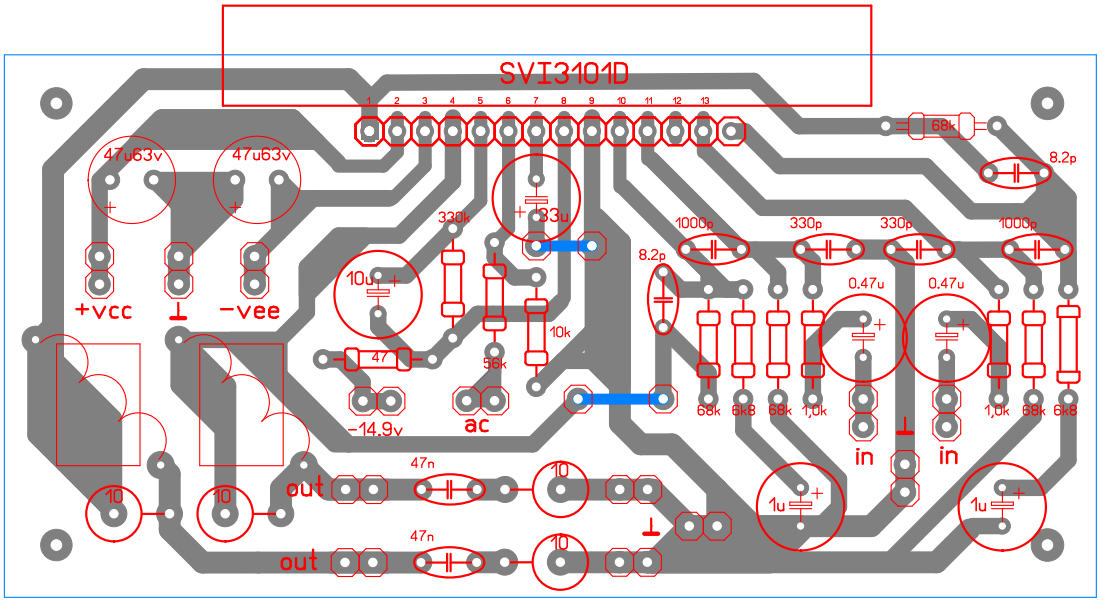
SVI3101D
1
2
3
4
5
6
7
8
9
10
11
12
13
68k
8.2p
47u63v
47u63v
+vcc
⊥
-vee
330k
33u
10u
47
10k
56k
-14.9v
ac
1000p
330p
330p
1000p
8.2p
0.47u
0.47u
68k
6k8
68k
1,0k
1,0k
68k
6k8
in
in
1u
1u
10
10
out
47n
10
47n
10
out
⊥

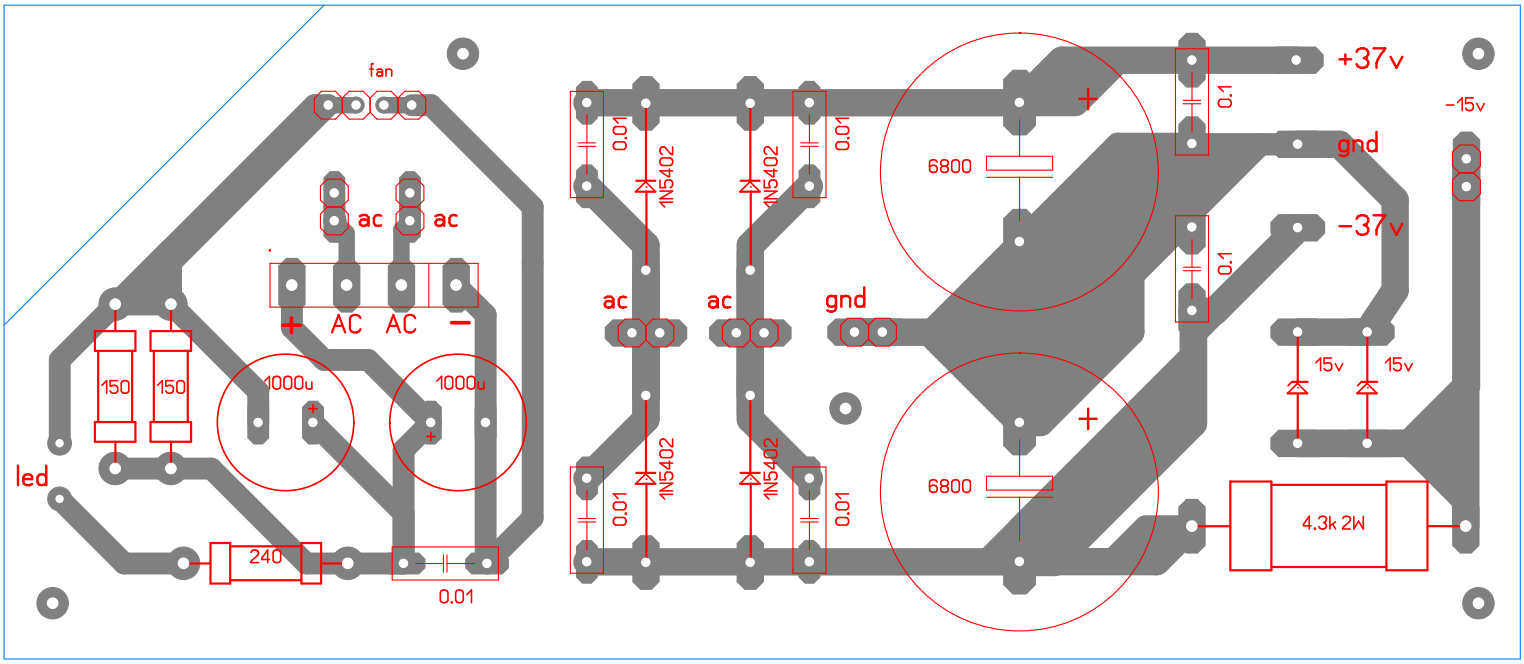
fan
ac
ac
+
AC
AC
−
150
150
1000u
1000u
led
240
0.01
0.01
1N5402
1N5402
0.01
ac
ac
gnd
1N5402
1N5402
0.01
0.01
6800
6800
+37v
0.1
gnd
0.1
-37v
-15v
15v
15v
4.3k 2W