MARK	REVISION	DATE	NAME	MARK	REVISION	DATE	NAME

D	C	B	A	REF	PART NO	DESCRIPTION	MATL	MATL SIZE	MATL WT

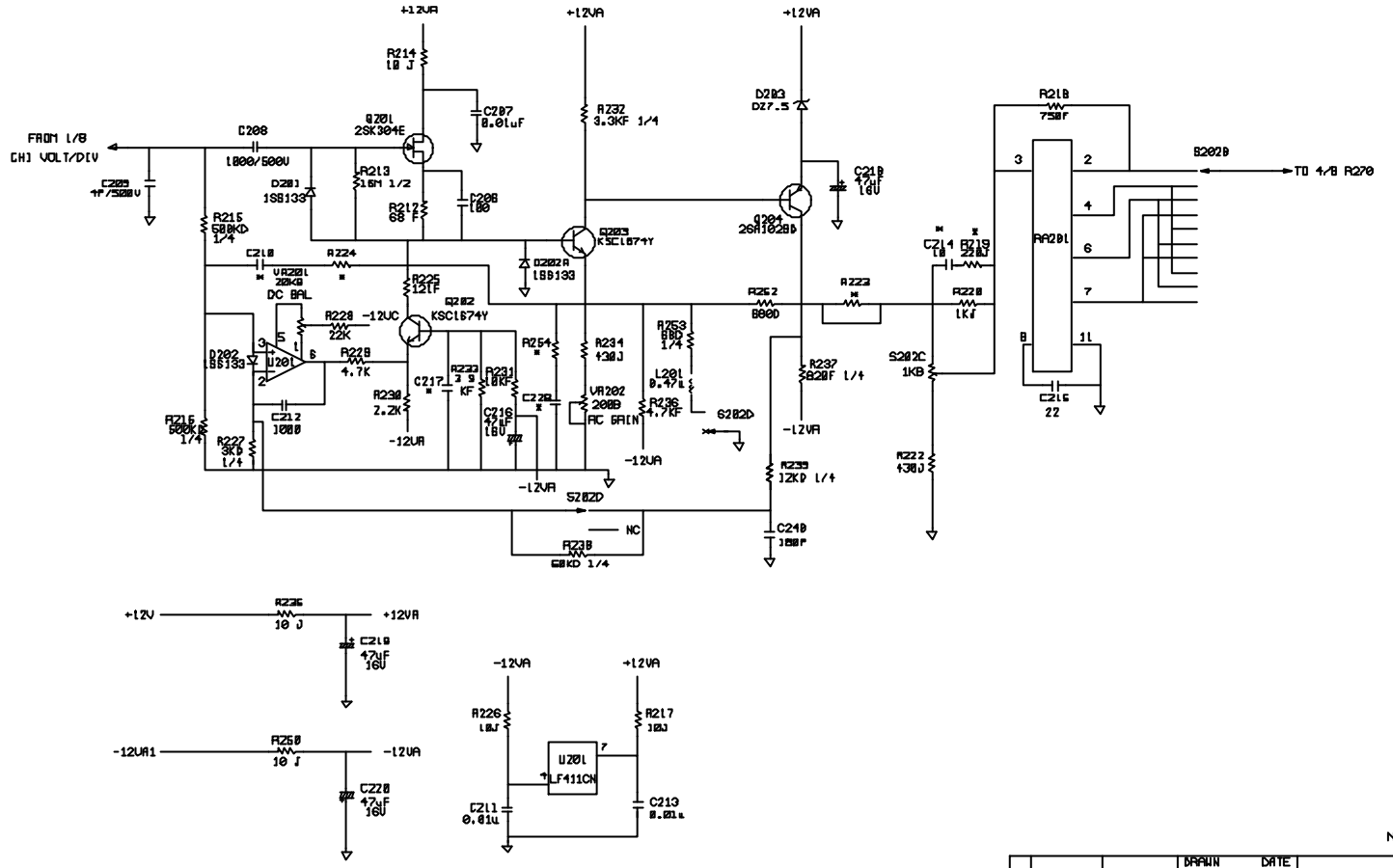

NOTE — *.NOT USED

			DRAWN DATE 2000/08/14	EZ DIGITAL CO.,LTD
			DESIGNED	TITLE
		D9-60208	CHECKED	CH1 INPUT AMPLIFIER
REF	NEXT ASSY	USED ON	VERIFIED	
APPLICATION			APPROVED	SIZE DWG. NO 511-465-F
UNLESS OTHERWISE SPECIFIED DIMENSIONS ARE TOLERANCES ON DECIMALS ±, ANGLES ±				SCALE UNIT SHEET 2 OF 8