MARK	REVISION	DATE	NAME	MARK	REVISION	DATE	NAME

D	C	B	A	QTY/PCS	PART NO	DESCRIPTION	MATL	MATL SIZE	MATL WT

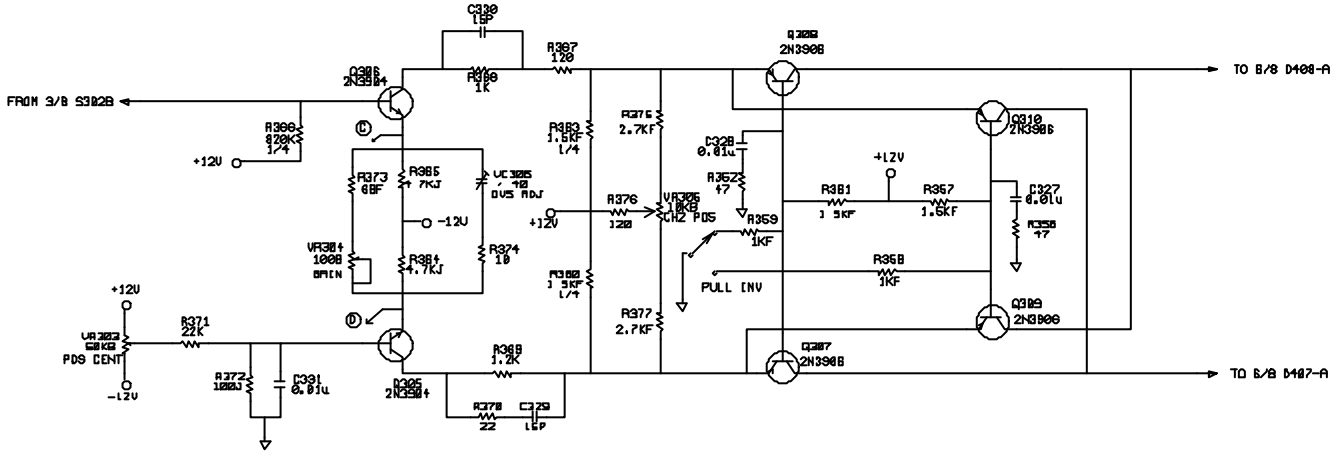

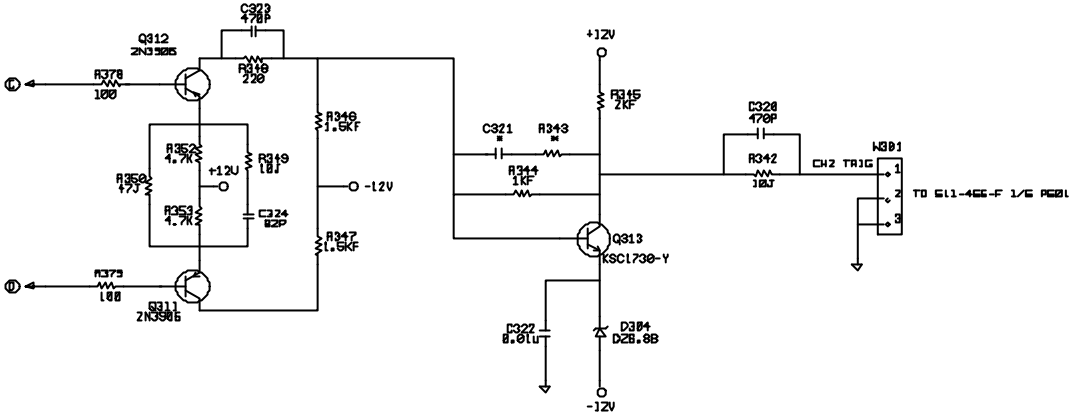

NOTE — ※;NOT USED

			DRAWN DATE 2000/09/14
			DESIGNED
		DS-60206	CHECKED
REF	NEXT ASSY	USED ON	VERIFIED
APPLICATION			APPROVED

UNLESS OTHERWISE SPECIFIED DIMENSIONS ARE TOLERANCES ON DECIMALS ANGLES

EZ DIGITAL CO.,LTD

TITLE

CH2 PRE AMP & TRIG PICK OFF

SIZE | DWG. NO 511-465-F

SCALE | UNIT | SHEET 5 OF 8