MARK	REVISION	DATE	NAME	MARK	REVISION	DATE	NAME

D	C	B	A		PART NO	DESCRIPTION	MATL	MATL SIZE	MATL WT

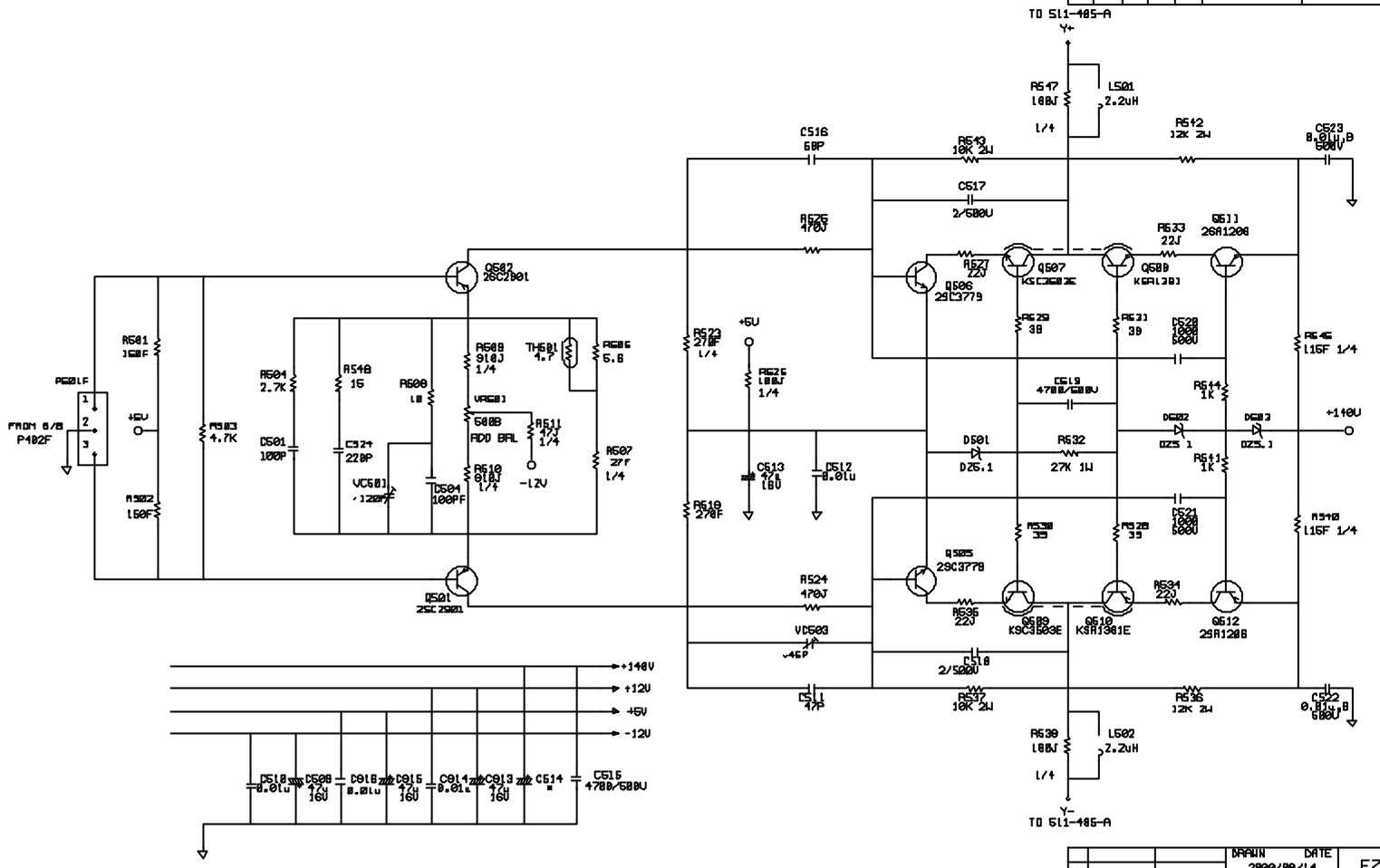

				DRAWN DATE 2000/08/14	EZ DIGITAL CO.,LTD
				DESIGNED	TITLE
			08-6020G	CHECKED	VERTICAL MAIN AMP.
REF	NEXT ASSY	USED ON		VERIFIED	
	APPLICATION			APPROVED	SIZE DWG. NO 511-485-G
UNLESS OTHERWISE SPECIFIED DIMENSIONS ARE TOLERANCES ON DECIMALS ± ANGLES ±					SCALE UNIT SHEET 7 OF 8