MARK	REVISION	DATE	NAME	MARK	REVISION	DATE	NAME
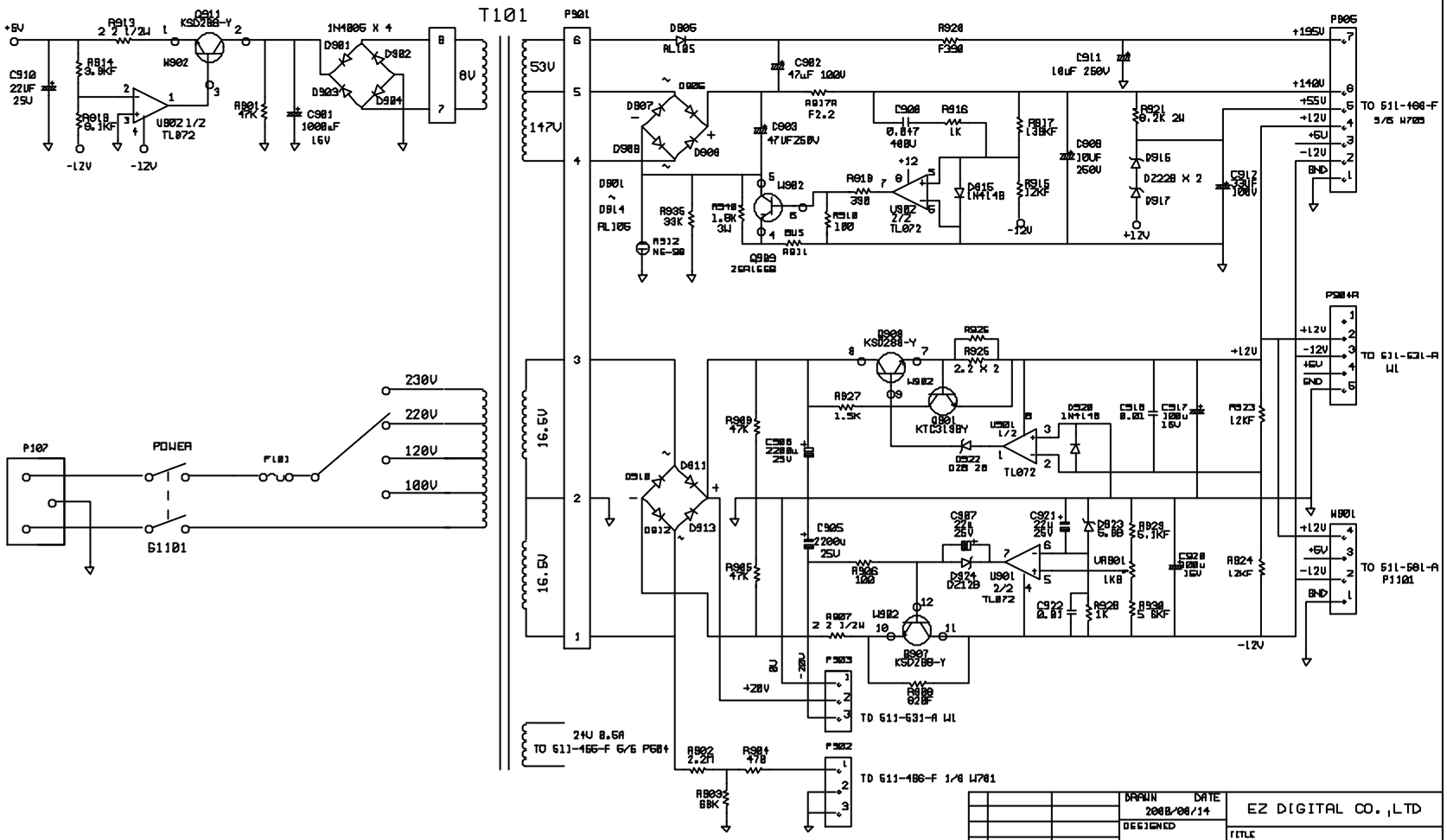
D	C	B	A		PART NO	DESCRIPTION	MATL	MATL SIZE	MATL WT