MARK	REVISION	DATE	NAME	MARK	REVISION	DATE	NAME

D	C	B	A	QTY/UNIT	PART NO	DESCRIPTION	MATL	MATL SIZE	MATL WT

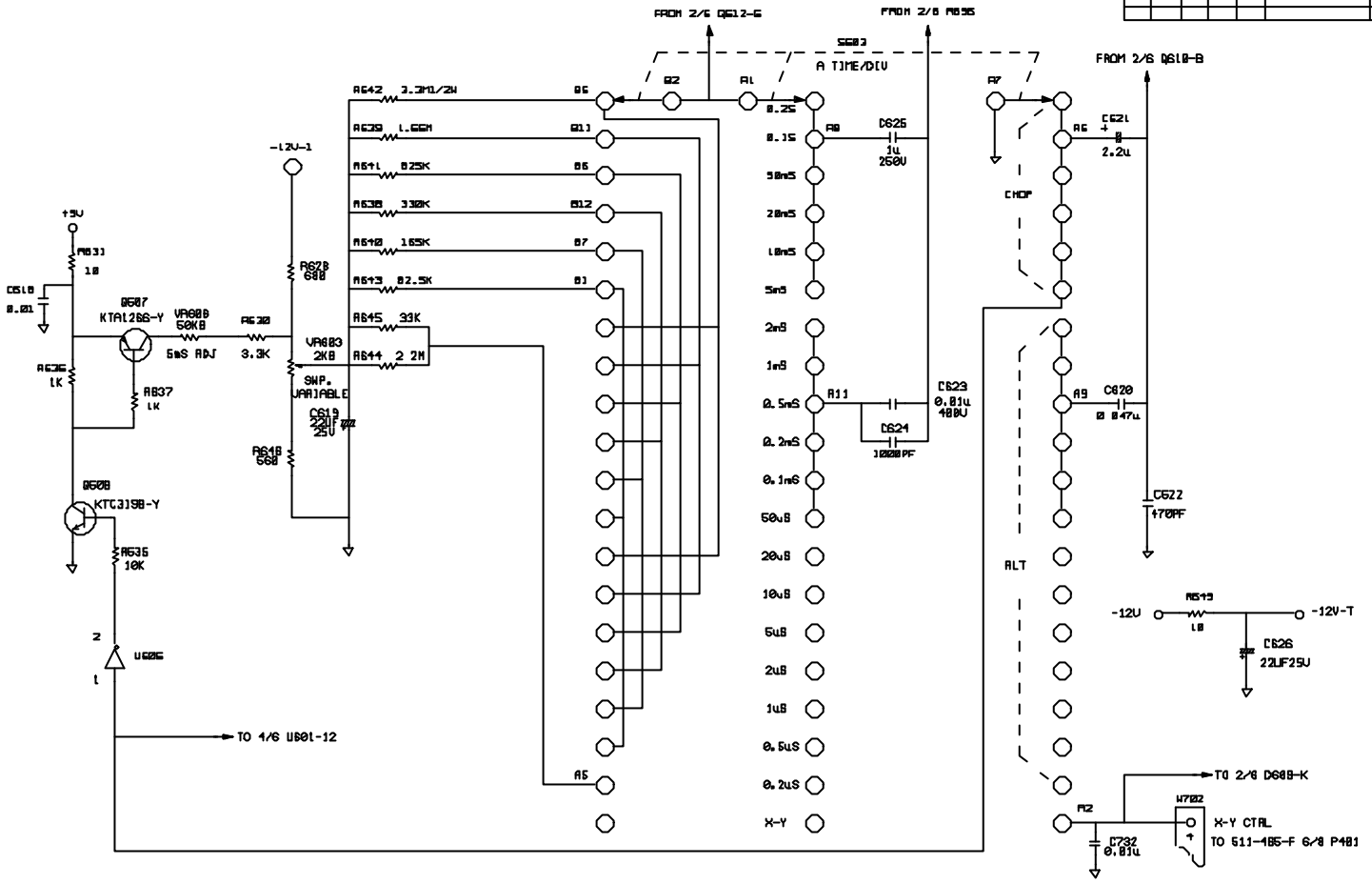

REF	NEXT ASSY	09-50288 USED ON	DRAWN 2002/08/14	EZ DIGITAL CO.,LTD
			DESIGNED	TITLE A TIMING
			CHECKED	
			VERIFIED	SIZE DWG. NO 511-486-F
			APPROVED	SCALE UNIT SHEET 3 OF 8

APPLICATION

UNLESS OTHERWISE SPECIFIED DIMENSIONS ARE TOLERANCES ON DECIMALS ANGLES ± ±