MARK	REVISION	DATE	NAME	MARK	REVISION	DATE	NAME

D	C	B	A	PART NO	DESCRIPTION	MATL	MATL SIZE	MATL WT

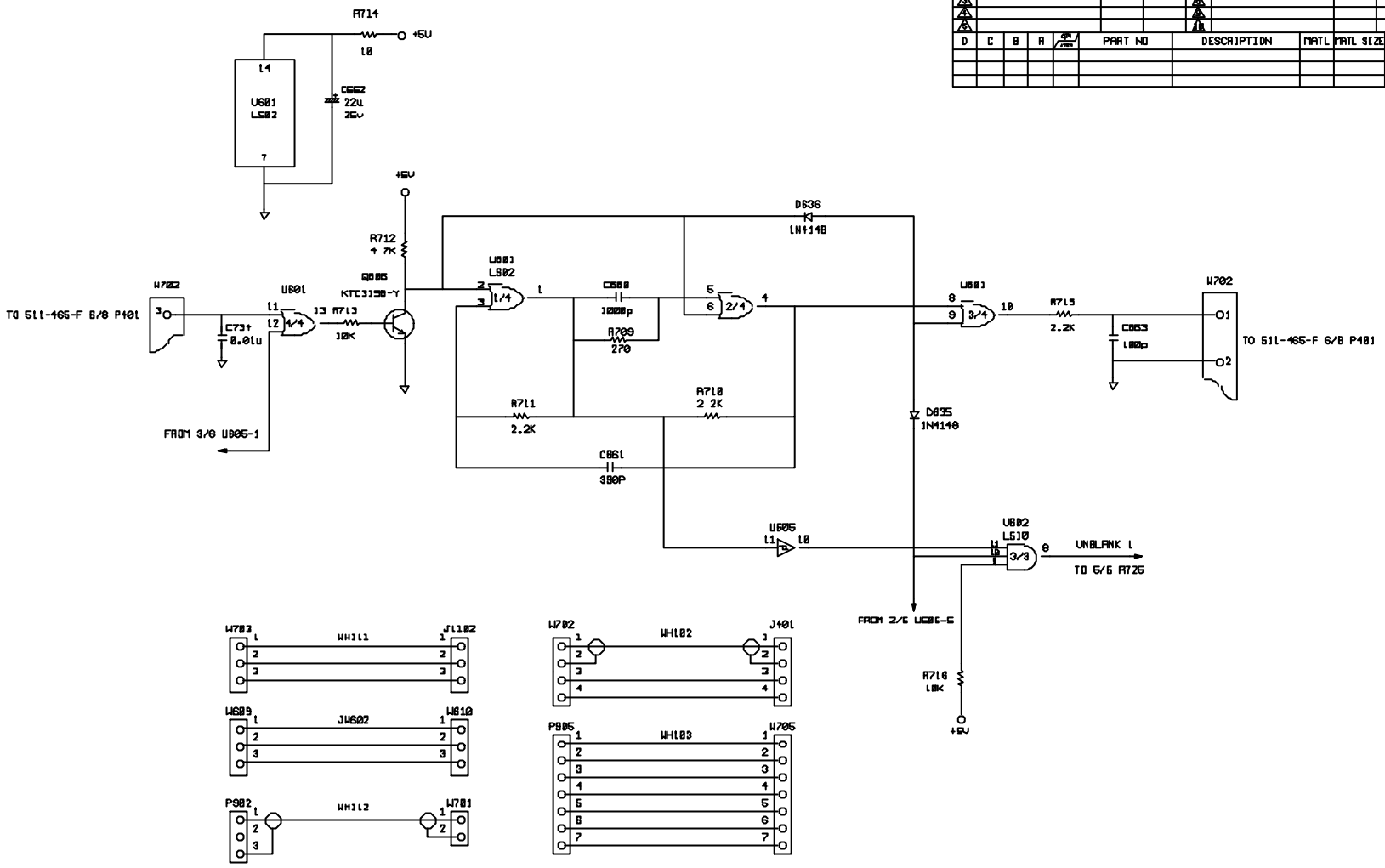

			DRAWN 2000/08/14	DATE
			DESIGNED	
		06-60206	CHECKED	
REF	NEXT ASSY	USED ON	VERIFIED	
APPLICATION			APPROVED	

UNLESS OTHERWISE SPECIFIED DIMENSIONS ARE TOLERANCES ON DECIMALS ANGLES

EZ DIGITAL CO.,LTD

TITLE

CHOP PULSE GENERATOR

SIZE | DWG. NO 511-465-F

SCALE | UNIT | SHEET 4 OF 6