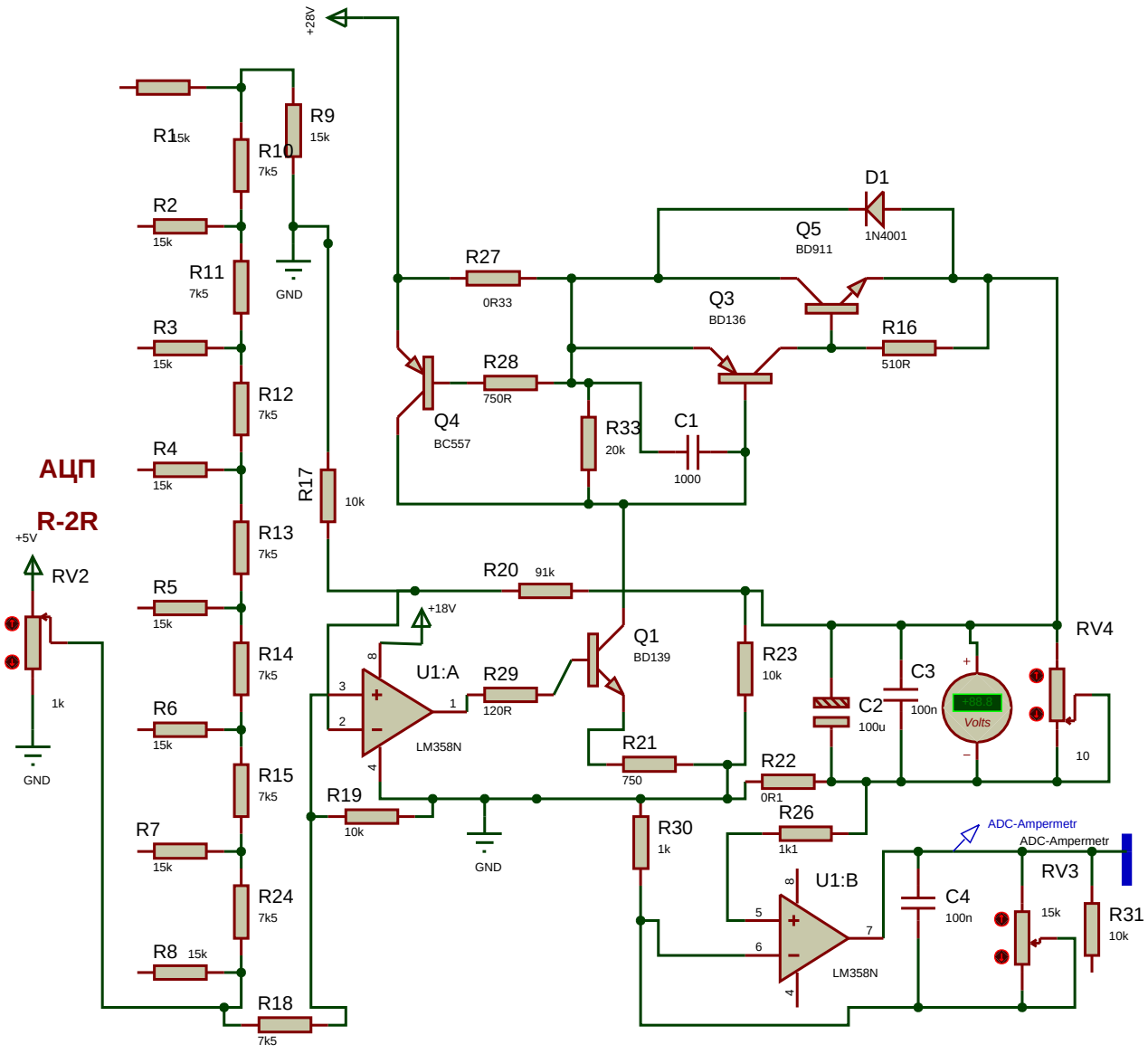
АЦП
R-2R
+28V
+18V
+5V
GND
R1 15k
R2 15k
R3 15k
R4 15k
R5 15k
R6 15k
R7 15k
R8 15k
R9 15k
R10 7k5
R11 7k5
R12 7k5
R13 7k5
R14 7k5
R15 7k5
R16 510R
R17 10k
R18 7k5
R19 10k
R20 91k
R21 750
R22 0R1
R23 10k
R24 7k5
R26 1k1
R27 0R33
R28 750R
R29 120R
R30 1k
R31 10k
RV2 1k
RV3 15k
RV4 10
C1 1000
C2 100u
C3 100n
C4 100n
D1 1N4001
Q1 BD139
Q3 BD136
Q4 BC557
Q5 BD911
U1:A LM358N
U1:B LM358N
Volts
ADC-Ampermetr
ADC-Ampermetr