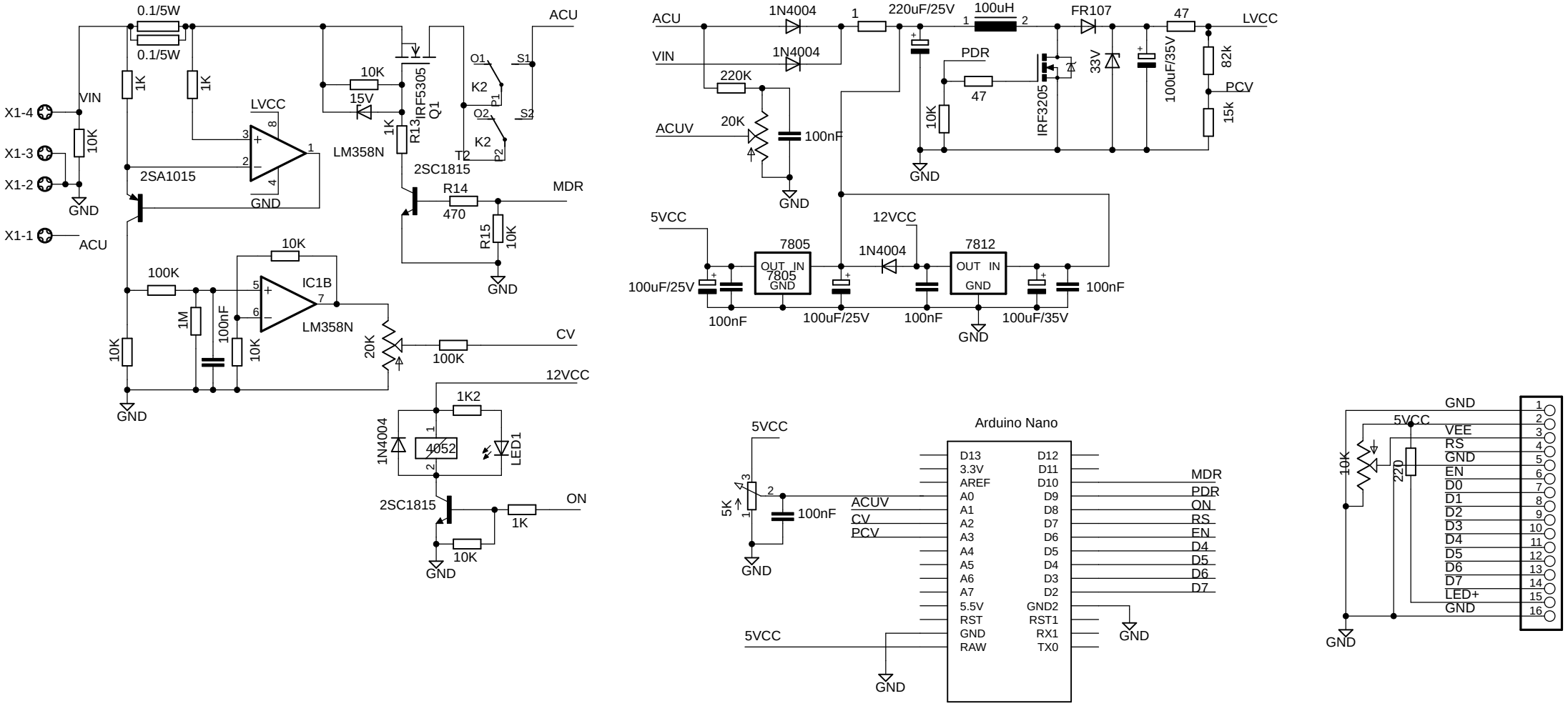
0.1/5W
0.1/5W
1K
1K
VIN
X1-4
X1-3
X1-2
X1-1
10K
GND
ACU
LVCC
2SA1015
LM358N
10K
15V
IRF5305
Q1
R13
1K
2SC1815
T2
O1
S1
K2
P1
O2
S2
K2
P2
R14
470
MDR
R15
10K
GND
10K
100K
IC1B
LM358N
1M
100nF
10K
10K
20K
100K
CV
12VCC
1K2
1N4004
4052
LED1
2SC1815
1K
ON
10K
GND
ACU
1N4004
1
220uF/25V
100uH
FR107
47
LVCC
VIN
1N4004
PDR
220K
47
33V
82k
PCV
ACUV
20K
100nF
10K
IRF3205
100uF/35V
15k
GND
GND
5VCC
12VCC
7805
OUT IN
GND
1N4004
7812
OUT IN
GND
100uF/25V
100nF
100uF/25V
100nF
100uF/35V
100nF
GND
5VCC
5K
100nF
GND
Arduino Nano
ACUV
CV
PCV
D13
3.3V
AREF
A0
A1
A2
A3
A4
A5
A6
A7
5.5V
RST
GND
RAW
D12
D11
D10
D9
D8
D7
D6
D5
D4
D3
D2
GND2
RST1
RX1
TX0
MDR
PDR
ON
RS
EN
D4
D5
D6
D7
GND
5VCC
GND
GND
5VCC
10K
220
GND
VEE
RS
GND
EN
D0
D1
D2
D3
D4
D5
D6
D7
LED+
GND
GND