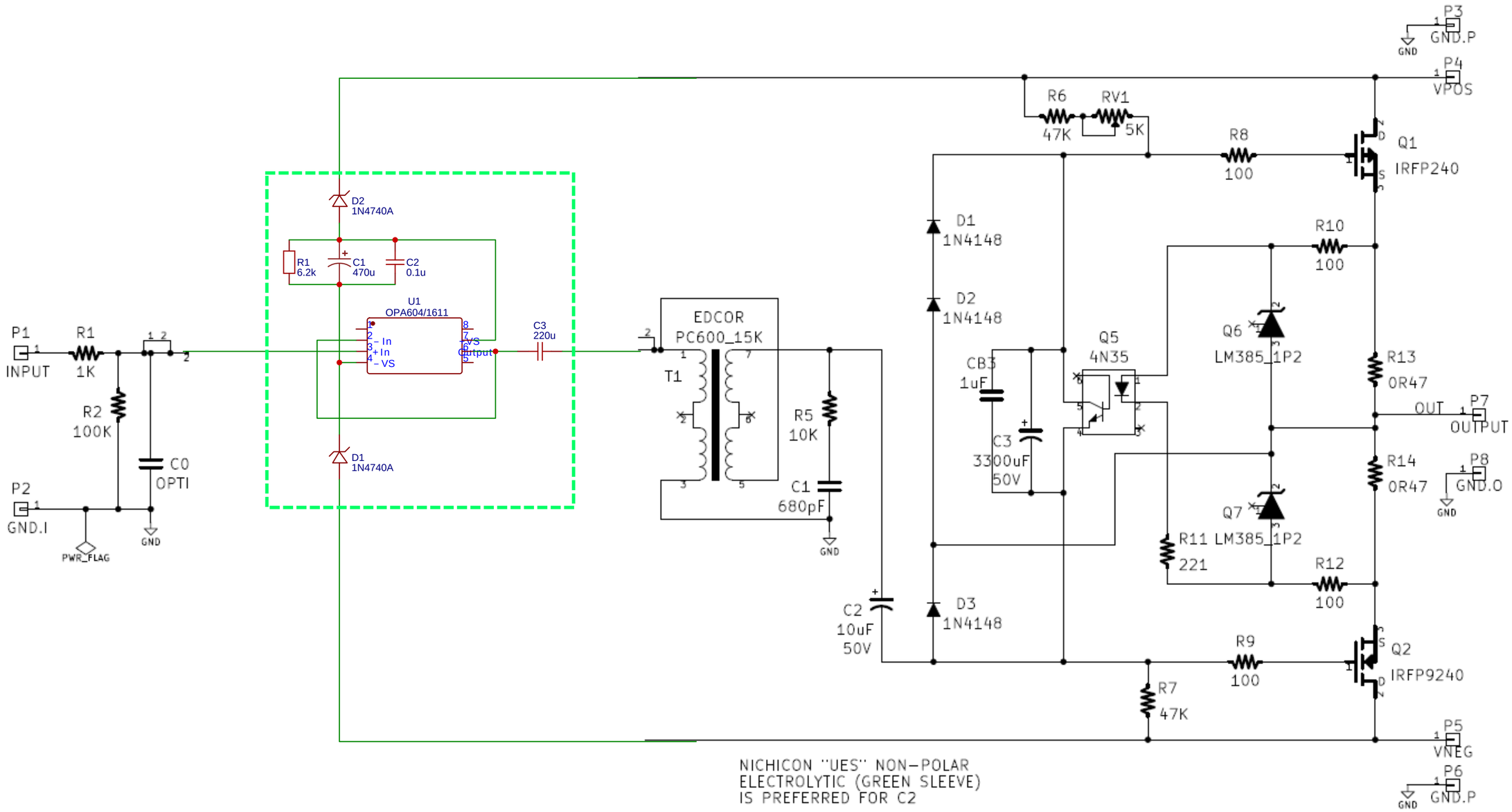


Do not repeat

| | | |
|---|---|---|
| TITLE: M2 | | REV: 1.0 |
| EasyEDA | Company: Your Company | Sheet: 1/1 |
| | Date: 2026-07-31 Drawn By: andreyzz | |