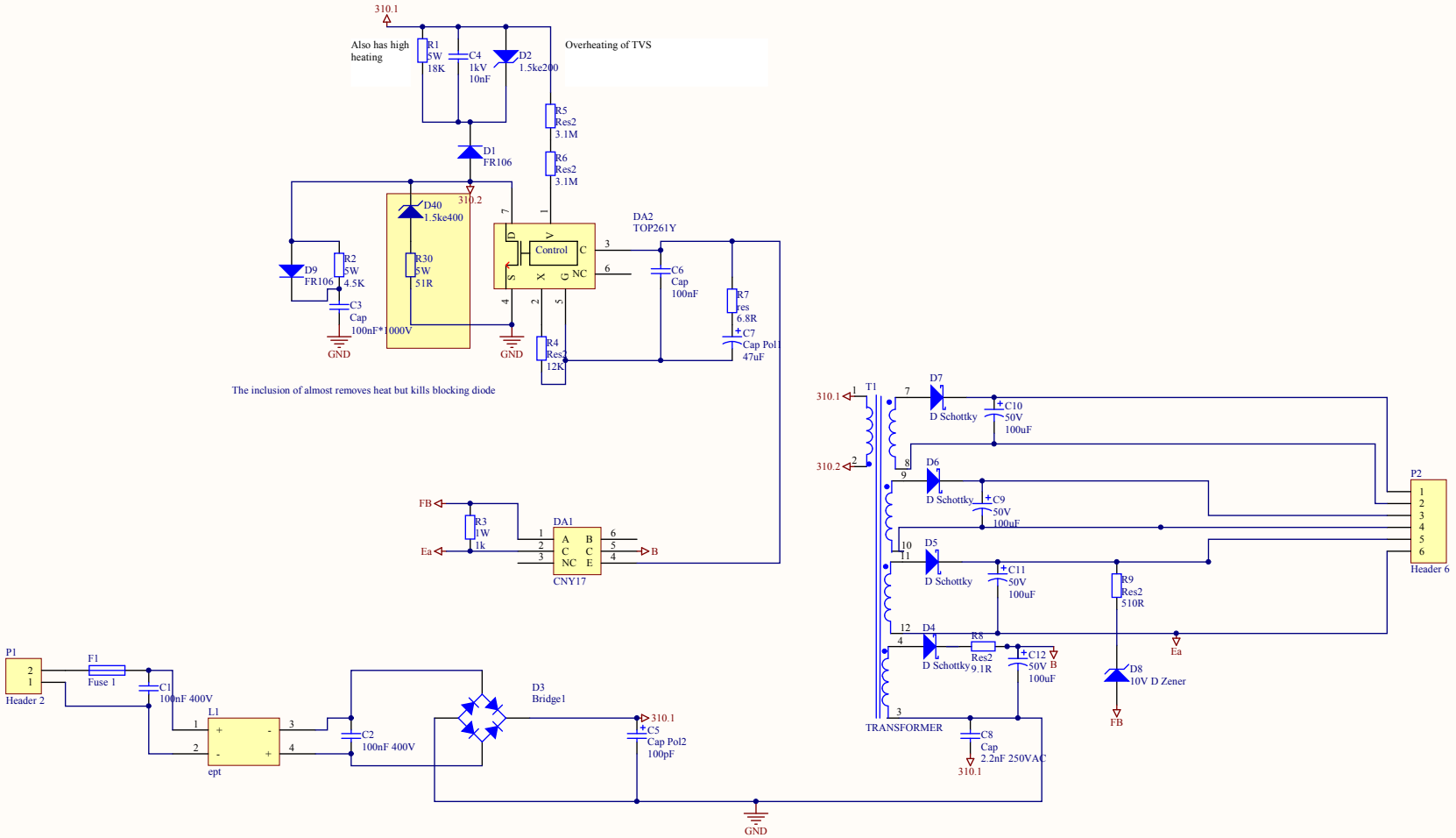

Title		
Size A3	Number	Revision
Date: 23.09.2010		Sheet of
File: H:\Program Files\..\maket.SchDoc		Drawn By: