lcd-volt-meter (0-5V)

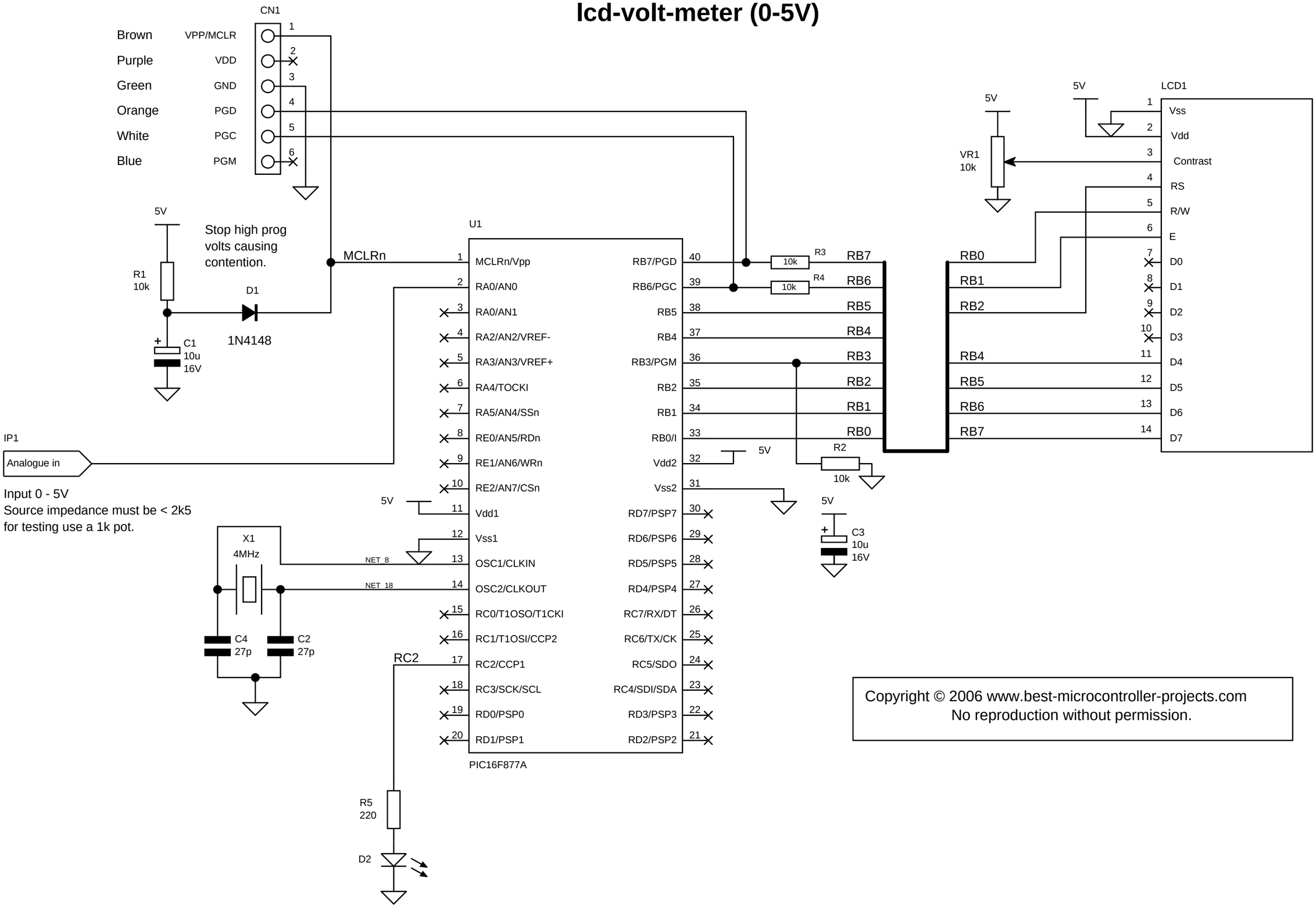

Copyright © 2006 www.best-microcontroller-projects.com
No reproduction without permission.