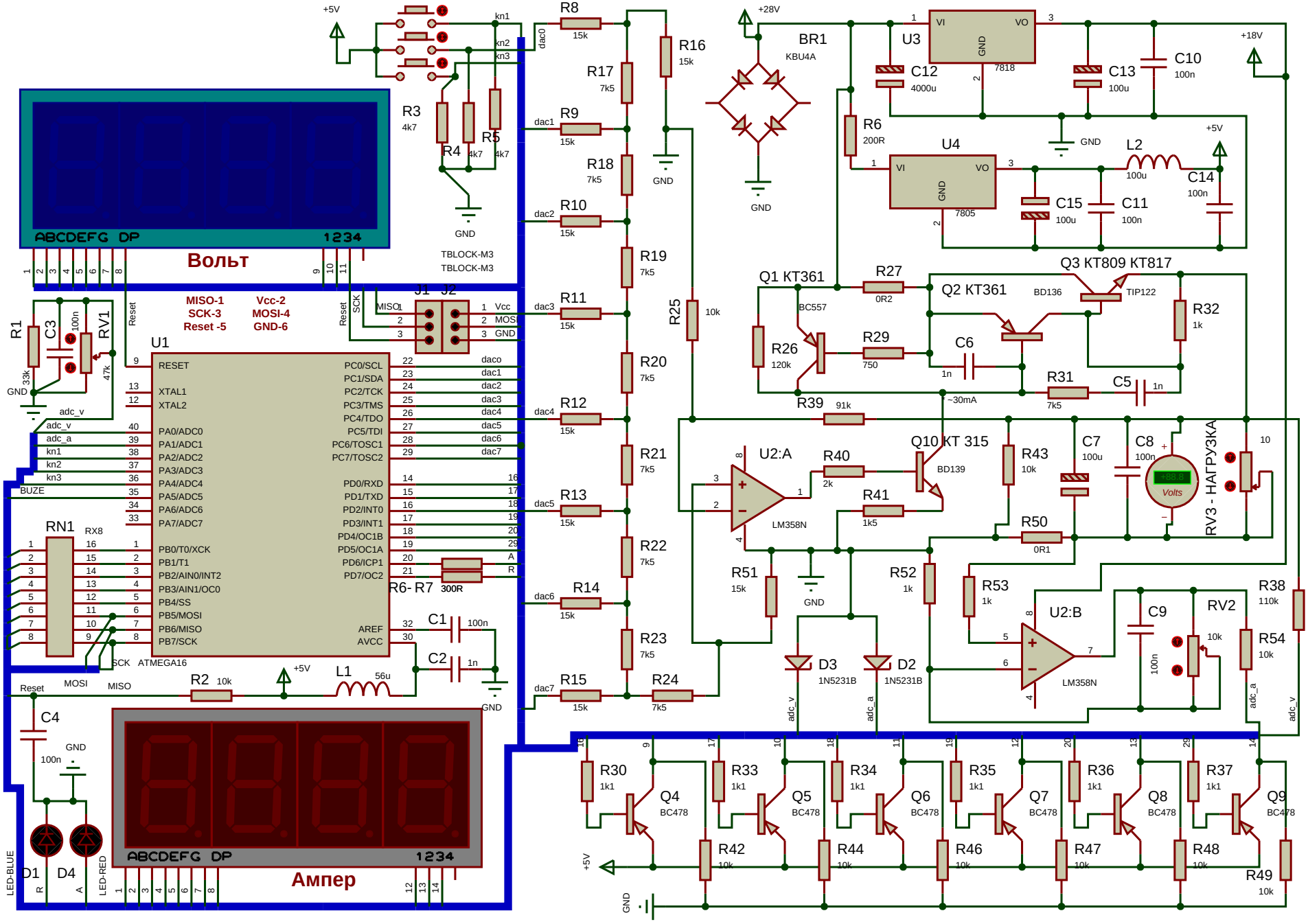
Вольт
Ампер
ABCDEFG DP
1234
MISO-1
SCK-3
Reset -5
Vcc-2
MOSI-4
GND-6
U1
ATMEGA16
RESET
XTAL1
XTAL2
PA0/ADC0
PA1/ADC1
PA2/ADC2
PA3/ADC3
PA4/ADC4
PA5/ADC5
PA6/ADC6
PA7/ADC7
PB0/T0/XCK
PB1/T1
PB2/AIN0/INT2
PB3/AIN1/OC0
PB4/SS
PB5/MOSI
PB6/MISO
PB7/SCK
PC0/SCL
PC1/SDA
PC2/TCK
PC3/TMS
PC4/TDO
PC5/TDI
PC6/TOSC1
PC7/TOSC2
PD0/RXD
PD1/TXD
PD2/INT0
PD3/INT1
PD4/OC1B
PD5/OC1A
PD6/ICP1
PD7/OC2
AREF
AVCC
RN1
RX8
R6- R7
300R
TBLOCK-M3
J1 J2
Vcc
MOSI
GND
BR1
KBU4A
U3
7818
U4
7805
Q1 KT361
BC557
Q2 KT361
BD136
Q3 KT809 KT817
TIP122
Q10 KT 315
BD139
U2:A
U2:B
LM358N
D3
D2
1N5231B
RV3 - НАГРУЗКА
RV2
Volts
LED-BLUE
LED-RED
D1
D4
Q4
Q5
Q6
Q7
Q8
Q9
BC478