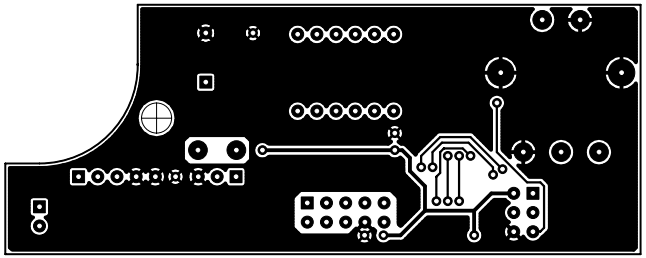

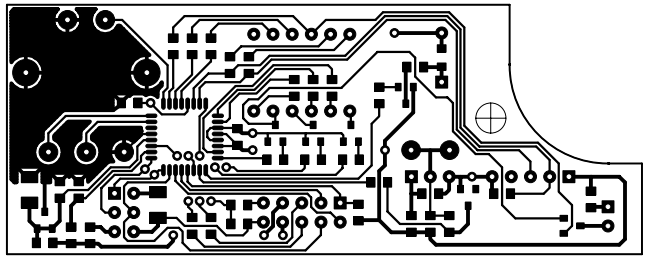

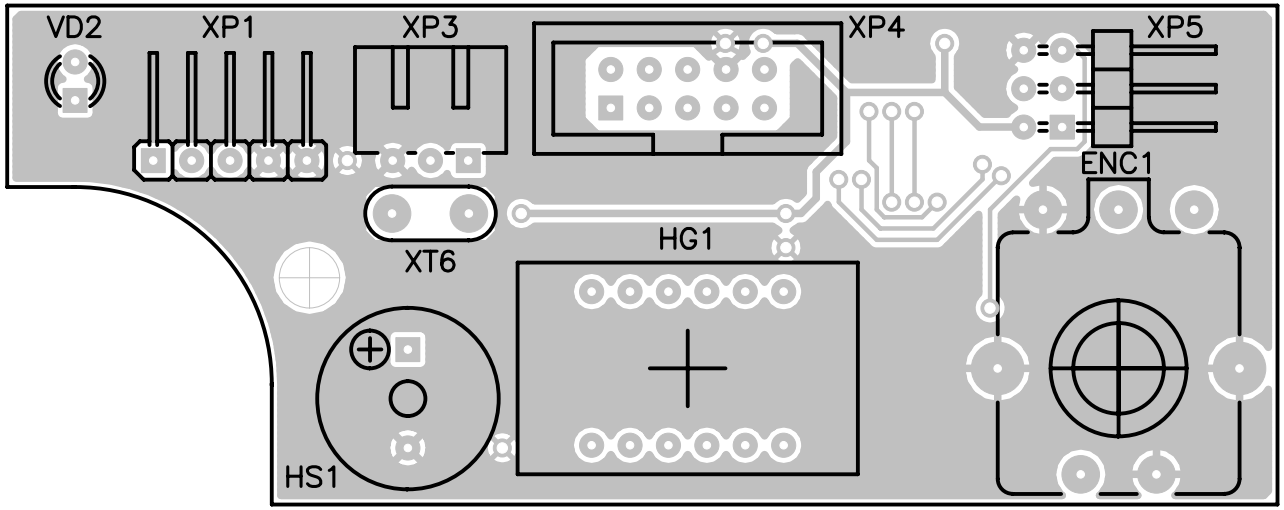
VD2
XP1
XP3
XP4
XP5
ENC1
XT6
HG1
HS1

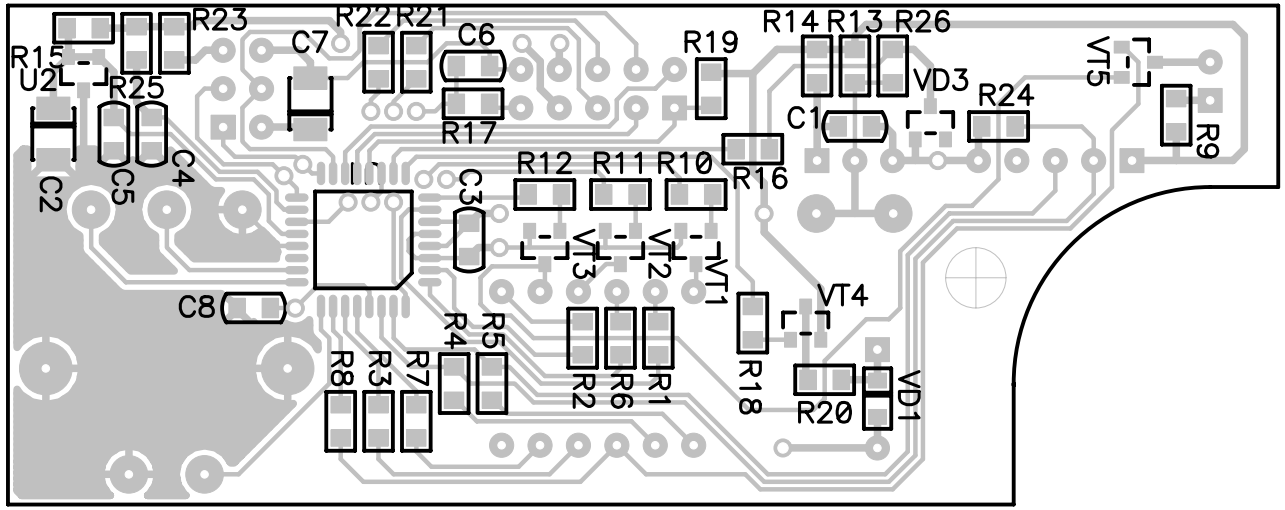
R23
R22
R21
C6
R14
R13
R26
R15
C7
R19
VT5
U2
R25
VD3
R24
C1
R9
R17
C4
C5
C2
R12
R11
R10
R16
C3
VT3
VT2
VT1
VT4
C8
R4
R5
R8
R3
R7
R2
R6
R1
R18
R20
VD1

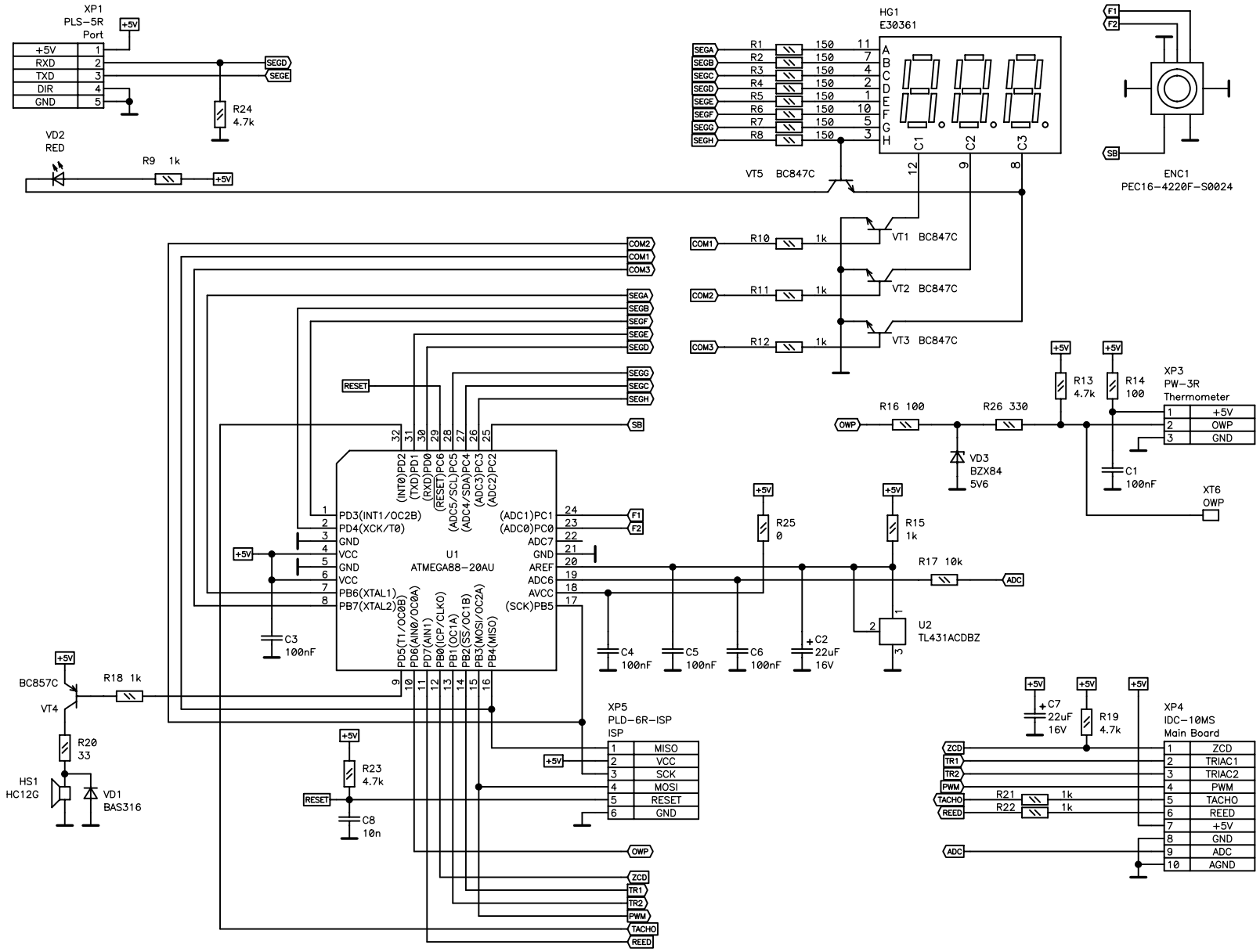

Company Name	NSM lab		
Size A35	Title DFS-90 (panel)		Rev A
Date Sun Dec 05, 2010		Drawn by NSM lab	
Filename DFS-90_Panel_4.sch		Sheet 1 of 1	