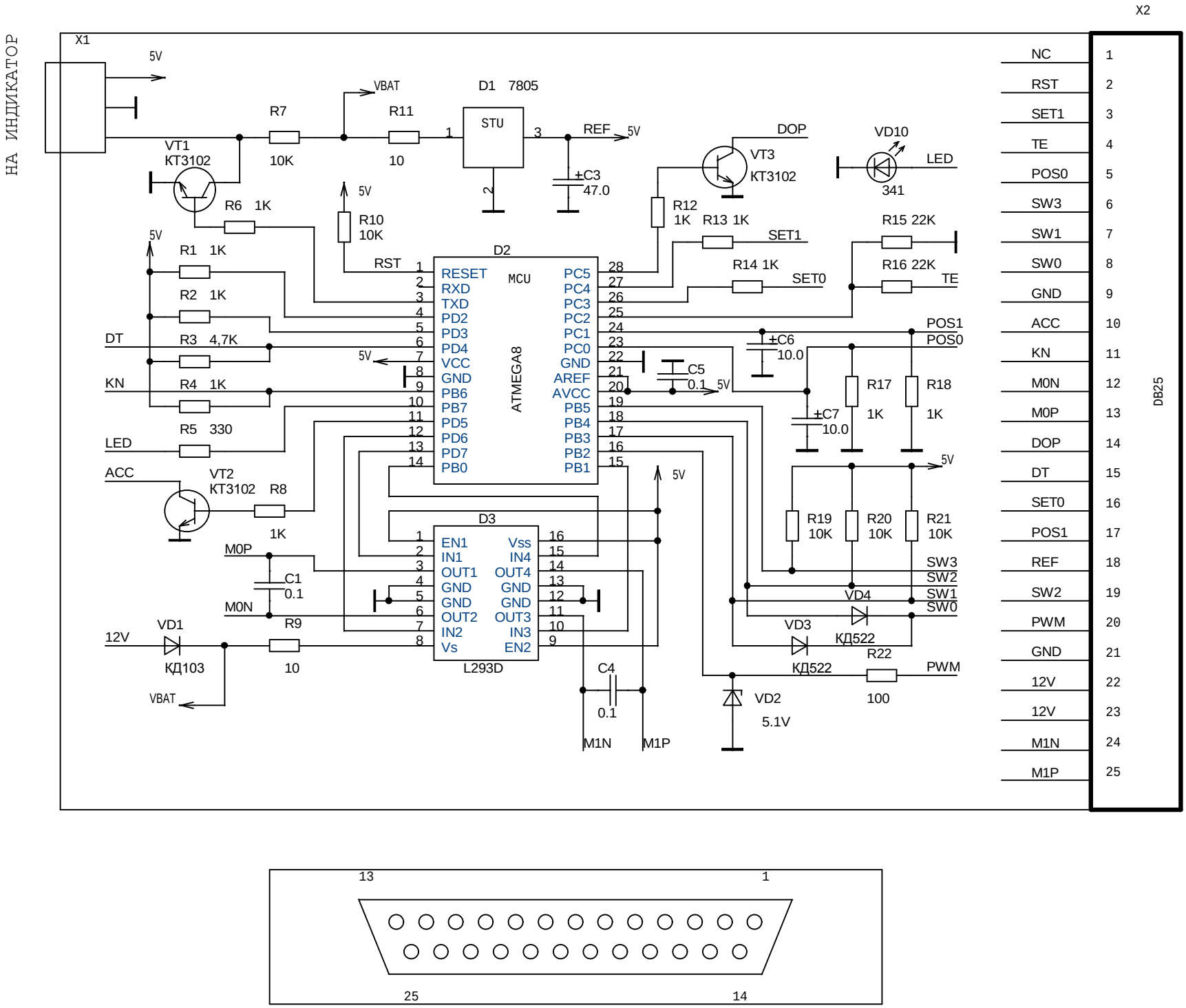
НА ИНДИКАТОР
X1
X2
5V
VBAT
D1 7805
STU
R7
10K
R11
10
REF
±C3
47.0
VT1
КТ3102
R6 1K
R10
10K
R12
1K
R13 1K
SET1
R14 1K
SET0
DOP
VT3
КТ3102
VD10
LED
341
R15 22K
R16 22K
TE
D2
MCU
ATMEGA8
RESET
RXD
TXD
PD2
PD3
PD4
VCC
GND
PB6
PB7
PD5
PD6
PD7
PB0
PC5
PC4
PC3
PC2
PC1
PC0
GND
AREF
AVCC
PB5
PB4
PB3
PB2
PB1
RST
R1 1K
R2 1K
R3 4,7K
R4 1K
R5 330
DT
KN
LED
ACC
VT2
КТ3102
R8
1K
±C6
10.0
C5
0.1
±C7
10.0
R17
1K
R18
1K
POS1
POS0
R19
10K
R20
10K
R21
10K
SW3
SW2
SW1
SW0
VD4
VD3
КД522
R22
100
PWM
D3
EN1
IN1
OUT1
GND
GND
OUT2
IN2
Vs
Vss
IN4
OUT4
GND
GND
OUT3
IN3
EN2
L293D
M0P
M0N
C1
0.1
R9
10
12V
VD1
КД103
VBAT
C4
0.1
M1N
M1P
VD2
5.1V
NC
RST
SET1
TE
POS0
SW3
SW1
SW0
GND
ACC
KN
M0N
M0P
DOP
DT
SET0
POS1
REF
SW2
PWM
GND
12V
12V
M1N
M1P
DB25

13
1
25
14