To do: calculate Freq, L1, C3, ripple

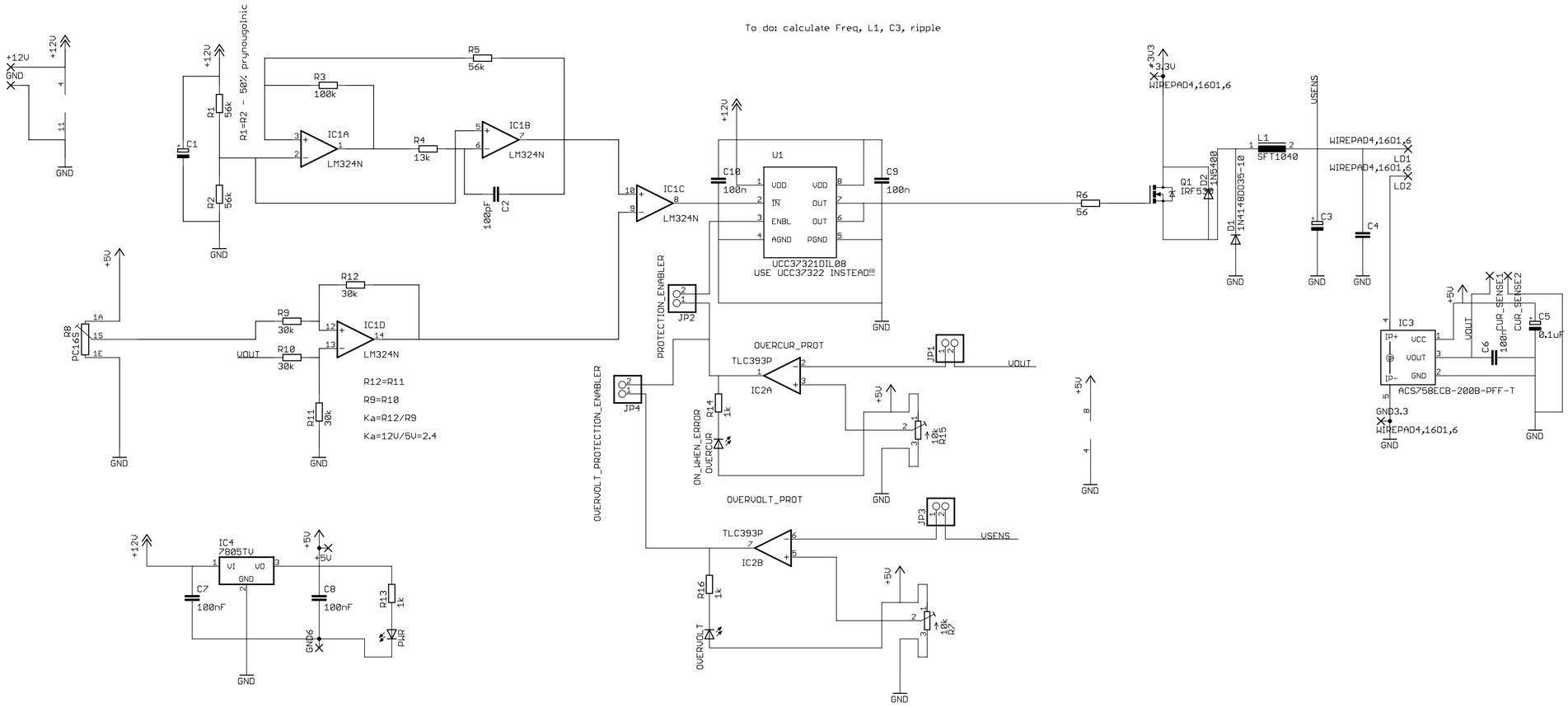

H1 MOUNT-HOLE2.8
H2 MOUNT-HOLE2.8
H3 MOUNT-HOLE2.8
H4 MOUNT-HOLE2.8

Changes from 1.0: New PCB layout with rigth trace width

Max current - 30A, 2 less then TO-220 case limited current 75A

+5V voltage regulator for independet current sensing. This voltage will go to current indication circuit as Vref for ADC

New K calculated, maybe new current sensor