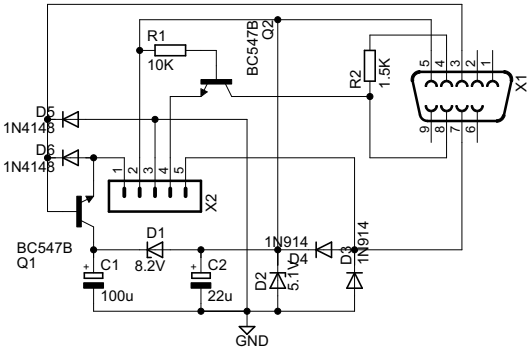
R1
10K
BC547B
Q2
R2
1.5K
X1
D5
1N4148
D6
1N4148
X2
BC547B
Q1
D1
8.2V
C1
100u
C2
22u
1N914
D4
D2
5.1V
D3
1N914
GND