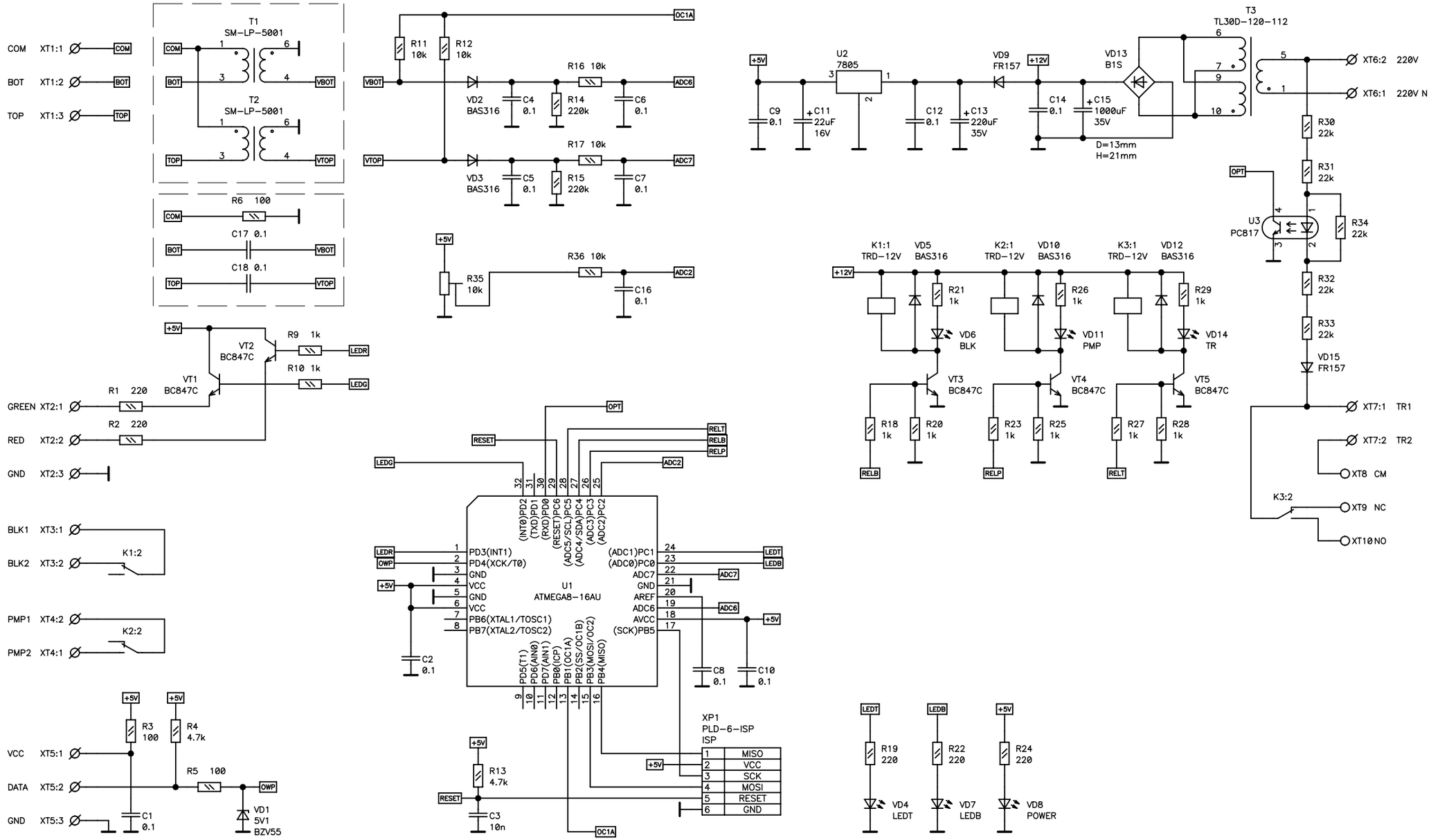
COM XT1:1
BOT XT1:2
TOP XT1:3
T1
SM-LP-5001
T2
SM-LP-5001
R6 100
C17 0.1
C18 0.1
R11 10k
R12 10k
R16 10k
R17 10k
VD2 BAS316
VD3 BAS316
C4 0.1
C5 0.1
R14 220k
R15 220k
C6 0.1
C7 0.1
OC1A
ADC6
ADC7
R35 10k
R36 10k
C16 0.1
ADC2
VT2 BC847C
VT1 BC847C
R9 1k
R10 1k
LEDR
LEDG
R1 220
R2 220
GREEN XT2:1
RED XT2:2
GND XT2:3
BLK1 XT3:1
BLK2 XT3:2
K1:2
PMP1 XT4:2
PMP2 XT4:1
K2:2
VCC XT5:1
DATA XT5:2
GND XT5:3
R3 100
R4 4.7k
R5 100
C1 0.1
VD1 5V1 BZV55
OWP
U1
ATMEGA8-16AU
PD3(INT1)
PD4(XCK/T0)
PB6(XTAL1/TOSC1)
PB7(XTAL2/TOSC2)
(ADC1)PC1
(ADC0)PC0
(SCK)PB5
LEDT
LEDB
OPT
RESET
RELT
RELB
RELP
C2 0.1
C8 0.1
C10 0.1
R13 4.7k
C3 10n
XP1
PLD-6-ISP
ISP
MISO
VCC
SCK
MOSI
RESET
GND
U2
7805
C9 0.1
C11 22uF 16V
C12 0.1
C13 220uF 35V
VD9 FR157
C14 0.1
C15 1000uF 35V
VD13 B1S
D=13mm
H=21mm
T3
TL30D-120-112
XT6:2 220V
XT6:1 220V N
R30 22k
R31 22k
R32 22k
R33 22k
R34 22k
U3 PC817
VD15 FR157
XT7:1 TR1
XT7:2 TR2
XT8 CM
K3:2
XT9 NC
XT10 NO
K1:1 TRD-12V
K2:1 TRD-12V
K3:1 TRD-12V
VD5 BAS316
VD10 BAS316
VD12 BAS316
R21 1k
R26 1k
R29 1k
VD6 BLK
VD11 PMP
VD14 TR
VT3 BC847C
VT4 BC847C
VT5 BC847C
R18 1k
R20 1k
R23 1k
R25 1k
R27 1k
R28 1k
R19 220
R22 220
R24 220
VD4 LEDT
VD7 LEDB
VD8 POWER