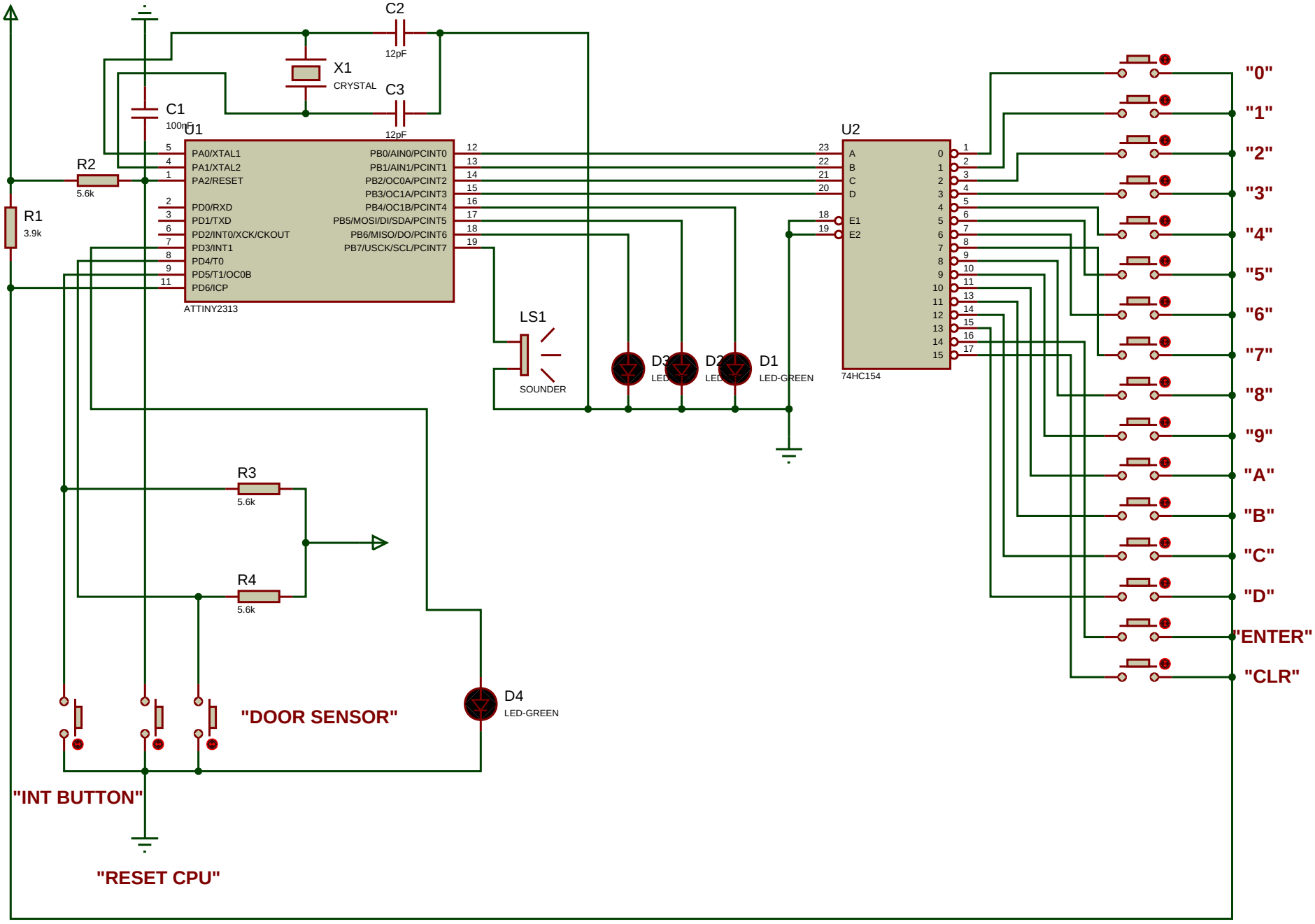
C2
12pF
X1
CRYSTAL
C3
12pF
C1
100nF
U1
R2
5.6k
R1
3.9k
PA0/XTAL1
PA1/XTAL2
PA2/RESET
PD0/RXD
PD1/TXD
PD2/INT0/XCK/CKOUT
PD3/INT1
PD4/T0
PD5/T1/OC0B
PD6/ICP
PB0/AIN0/PCINT0
PB1/AIN1/PCINT1
PB2/OC0A/PCINT2
PB3/OC1A/PCINT3
PB4/OC1B/PCINT4
PB5/MOSI/DI/SDA/PCINT5
PB6/MISO/DO/PCINT6
PB7/USCK/SCL/PCINT7
ATTINY2313
LS1
SOUNDER
D3
D2
D1
LED-GREEN
U2
A
B
C
D
E1
E2
74HC154
"0"
"1"
"2"
"3"
"4"
"5"
"6"
"7"
"8"
"9"
"A"
"B"
"C"
"D"
"ENTER"
"CLR"
R3
5.6k
R4
5.6k
D4
LED-GREEN
"DOOR SENSOR"
"INT BUTTON"
"RESET CPU"