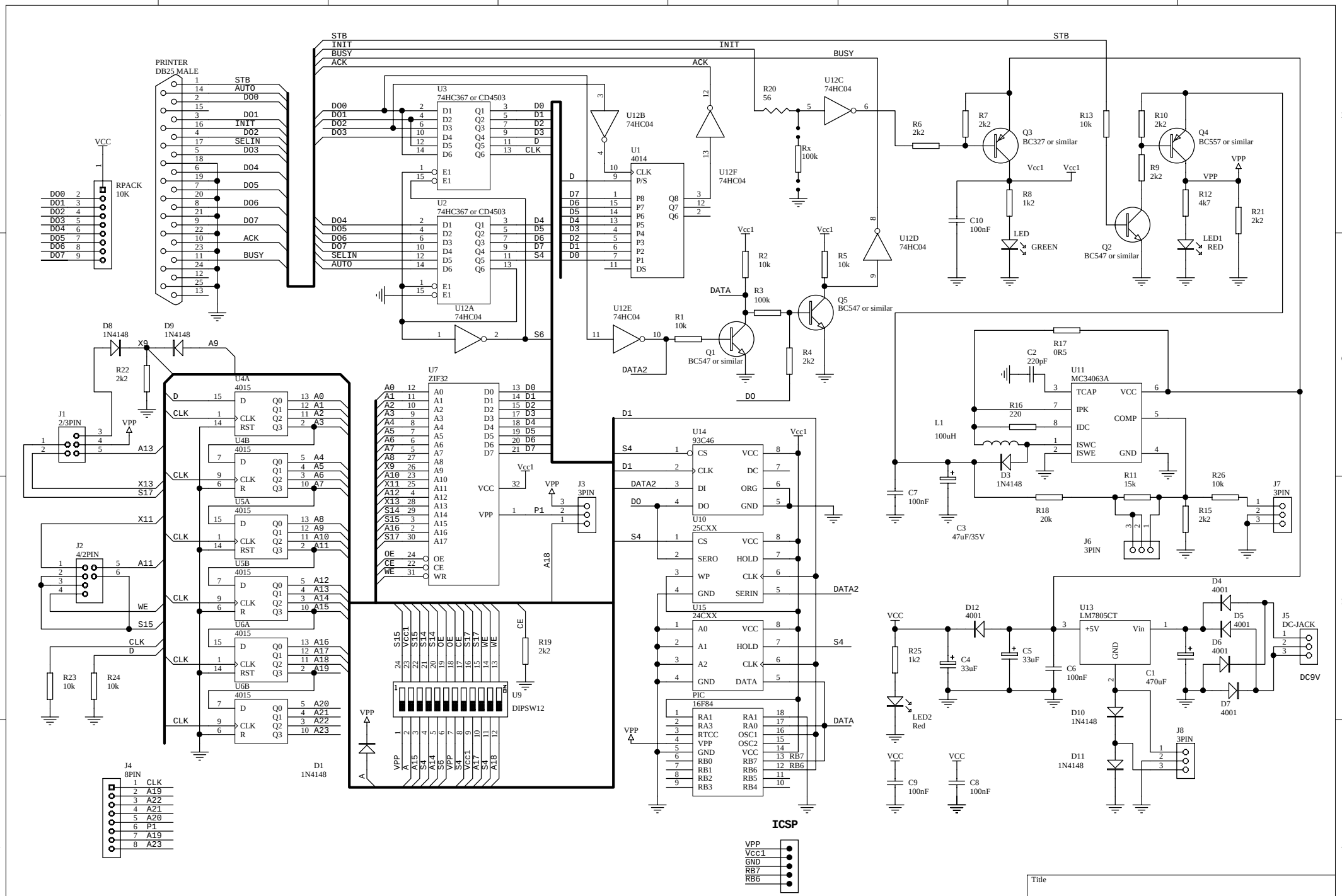

Title		
Size A3	Number	Revision
Date: 19-Apr-2002	Sheet of	
File: C:\CAD\SCH\WIL1.SCH	Drawn By:	